aiwa SERVICE

XR-M88 K(S)
XR-M89 EZ(S)

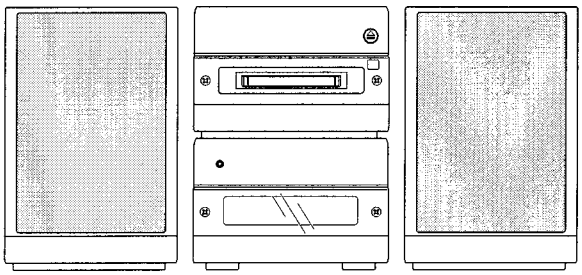

SERVICE MANUAL

COMPACT DISC STEREO SYSTEM

- BASIC TAPE MECHANISM : TN-708C-128R
- BASIC CD MECHANISM : KSM-620AAA

SYSTEM	RECEIVER	CD/ CASSETTE	SPEAKER
XR-M88	RX-LM88	FD-LM88	SX-LM200
XR-M89	RX-LM89	FD-LM89	SX-LM200

This Service Manual is the "Revision Publishing" and replaces "Simple Manual" (S/M Code No.09-996-333-3T2).

MC-Service

aiwa

S/M Code No. 09-996-333-3R2

REVISION DATA

TABLE OF CONTENTS

SPECIFICATIONS 3
PROTECTION OF EYES FROM LASER BEAM DURING SERVICING 4
Precaution to replace Optical block 4

MODEL NO. RX-LM88/RX-LM89

ELECTRICAL MAIN PARTS LIST 5-7
TRANSISTOR ILLUSTRATION 7
FL (13-ST-36GNAK) GRID ASSIGNMENT/ANODE CONNECTION 8
WIRING-1 (POWER AMP) 9, 10
SCHEMATIC DIAGRAM-1 (POWER AMP) 11, 12
WIRING-2 (FRONT) 13, 14
SCHEMATIC DIAGRAM-2 (FRONT) 15, 16
WIRING-3 (TUNER) 17, 18
SCHEMATIC DIAGRAM-3 (TUNER) 19, 20
ELECTRICAL ADJUSTMENT/PRACTICAL SERVICE FIGURE 21, 22
IC DESCRIPTION 23, 24
IC BLOCK DIAGRAM 25
MECHANICAL EXPLODED VIEW 1/1 26
MECHANICAL PARTS LIST 1/1 27

MODEL NO. FD-LM88/FD-LM89

DISASSEMBLY INSTRUCTIONS 28-32
ELECTRICAL MAIN PARTS LIST 33-35
TRANSISTOR ILLUSTRATION 36
WIRING-1 (CD) 37-40
SCHEMATIC DIAGRAM-1 (CD 1/2) 41, 42
SCHEMATIC DIAGRAM-2 (CD 2/2) 43, 44
WIRING-2 (TAPE) 45, 46
WIRING-3 (KEY) 47, 48
WIRING-4 (FUNC) 49, 50
SCHEMATIC DIAGRAM-3 (TAPE/FUNC/KEY) 51, 52
TEST MODE 53
ELECTRICAL ADJUSTMENT 54, 55
IC DESCRIPTION 56-61
IC BLOCK DIAGRAM 62
MECHANICAL EXPLODED VIEW 1/1 63
MECHANICAL PARTS LIST 1/1 64
TAPE MECHANISM EXPLODED VIEW 1/1 65
TAPE MECHANISM PARTS LIST 1/1 66
CD MECHANISM EXPLODED VIEW 1/1 67
CD MECHANISM PARTS LIST 1/1 67

MODEL NO. SX-LM200

SPEAKER DISASSEMBLY INSTRUCTIONS 68
SPEAKER PARTS LIST 1/1 69

ACCESSORIES/PACKAGE LIST 69

SPECIFICATIONS

STEREO RECEIVER RX-LM88 / RX-LM89

FM tuner section

Tuning range	87.5 MHz to 108 MHz
Usable sensitivity (IHF)	13.2 dBf
Antenna terminals	75 ohms (unbalanced)

MW tuner section

Tuning range	531 kHz to 1602 kHz (9 kHz step) 530 kHz to 1710 kHz (10 kHz step)
Usable sensitivity	350 µV/m
Antenna	Loop antenna

LW tuner section

Tuning range	144 kHz to 290 kHz
Usable sensitivity	1400 µV/m
Antenna	Loop antenna

Amplifier section

Power output	Rated: 16 W + 16 W (6 ohms, T.H.D. 1%, 1kHz/DIN 45500) Reference: 20 W + 20 W (6 ohms, T.H.D. 10%, 1kHz/DIN 45324) EZ MODEL: DIN MUSIC POWER 30W+30W
Outputs	SUPER WOOFER: 1.4 V SPEAKERS: accept speakers of 6 ohms or more PHONES (stereo minijack): accepts headphones of 16 ohms or more

General

Power requirements	230 V AC, 50 Hz
Power consumption	57 W
Standby power consumption	2.5 W (power economizing mode set to ON)
Dimensions (W × H × D)	144 × 100 × 206.5 mm
Weight	2.7 kg

STEREO CASSETTE DECK/COMPACTDISC PLAYER FD-LM88/FD-LM89

Compact disc player section

Laser	Semiconductor laser (λ = 780 nm)
D-A converter	1 bit dual
Signal-to-noise ratio	85 dB (1 kHz, 0 dB)
Harmonic distortion	0.05 % (1 kHz, 0 dB)
Wow and flutter	Unmeasurable

Cassette deck section

Track format	4 tracks, 2 channels stereo
Frequency response	CrO_2 tape: 50 Hz – 16000 Hz Normal tape: 50 Hz – 15000 Hz
Signal-to-noise ratio	54 dB (CrO_2 tape peak level)
Recording system	AC bias
Heads	Recording/playback head ×1 Erase head ×2

General

Inputs	MD IN: 400 mV AUX IN: 470 mV
Outputs	DIGITAL OUT LINE OUT: 400 mV
Dimensions (W × H × D)	144 × 100.6 × 203 mm
Weight	1.5 kg

SPEAKER SYSTEM SX-LM200

Cabinet type	2 way, bass reflex (magnetic shielded type)
Speakers	Woofer: 100 mm cone type Tweeter: 25 mm balanced dome type
Impedance	6 ohms
Output sound pressure level	87 dB/W/m
Dimensions (W × H × D)	120 × 200 × 182 mm
Weight	1.6 kg

- Design and specifications are subject to change without notice.
- Dolby noise reduction manufactured under license from Dolby Laboratories Licensing Corporation.
  "DOLBY" and the double-D symbol ▯▯ are trademarks of Dolby Laboratories Licensing Corporation.
- The word "BBE" and the "BBE symbol" are trademarks of BBE Sound, Inc.
  Under license from BBE Sound, Inc.

MC-Service

PROTECTION OF EYES FROM LASER BEAM DURING SERVICING

This set employs laser. Therefore, be sure to follow carefully the instructions below when servicing.

WARNING!

WHEN SERVICING, DO NOT APPROACH THE LASER EXIT WITH THE EYE TOO CLOSELY. IN CASE IT IS NECESSARY TO CONFIRM LASER BEAM EMISSION. BE SURE TO OBSERVE FROM A DISTANCE OF MORE THAN 30cm FROM THE SURFACE OF THE OBJECTIVE LENS ON THE OPTICAL PICK-UP BLOCK.

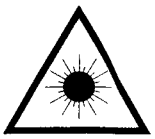

- Caution: Invisible laser radiation when open and interlocks defeated avoid exposure to beam.
- Advarsel: Usynling laserstråling ved åbning, når sikkerhedsafbrydere er ude af funktion. Undgå udsættelse for stråling.

VAROITUS!

Laiteen Käyttäminen muulla kuin tässä käyttöohjeessa mainitulla tavalla saattaa altistaa käyt-täjän turvallisuusluokan 1 ylittävälle näkymättömälle lasersäteilylle.

VARNING!

Om apparaten används på annat sätt än vad som specificeras i denna bruksanvising, kan användaren utsättas för osynling laserstrålning, som överskrider gränsen för laserklass 1.

CAUTION

Use of controls or adjustments or performance of procedures other than those specified herein may result in hazardous radiation exposure.

ATTENTION

L'utilisation de commandes, réglages ou procédures autres que ceux spécifiés peut entraîner une dangereuse exposition aux radiations.

ADVARSEL!

Usynlig laserstråling ved åbning, når sikkerhedsafbrydereer ude af funktion. Undgå udsættelse for stråling.

This Compact Disc player is classified as a CLASS 1 LASER product.
The CLASS 1 LASER PRODUCT label is located on the rear exterior.

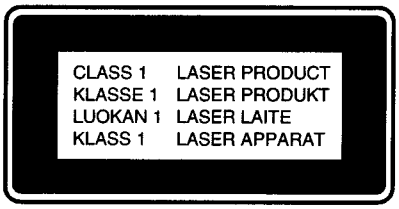

Precaution to replace Optical block (KSM-620AAA)

Body or clothes electrostatic potential could ruin laser diode in the optical block. Be sure ground body and workbench, and use care the clothes do not touch the diode.

1) After the connection, remove solder shown in the right figure.

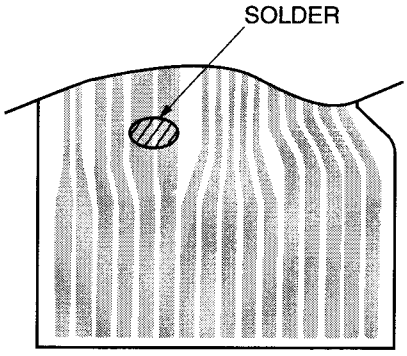

MODEL NO. RX-LM88

ELECTRICAL MAIN PARTS LIST

DESCRIPTIONで判断できない物は "REFERENCE NAME LIST" を参照してください。
If can't understand for Description please kindly refer to "REFERENCE NAME LIST".

REF. NO	PART NO.	KANRI NO.	DESCRIPTION
IC			
	87-070-127-110		IC,LC72131 D
	87-A20-913-010		IC,LA1837NL
	8Z-CL1-627-010		IC,LC866532A-5L31RX
TRANSISTOR			
	89-213-702-010		TR,2SB1370 (1.8W)
	87-026-610-080		TR,KTC3198GR
	87-A30-076-080		C-TR,2SC3052F
	87-A30-075-080		C-TR,2SA1235F
	87-A30-234-080		TR,CSC4115BC
	87-026-609-080		TR,KTA1266GR
	87-A30-073-080		C-TR,RT1N 141C
	87-A30-190-080		TR,CC5551
	87-A30-307-010		TR,2SD2619
	87-A30-306-010		TR,2SB1677
	87-A30-119-040		C-TR,2SC3906K R
	87-A30-047-080		TR,CSD655E
	87-A30-107-070		C-TR,CMBT5401
	87-A30-074-080		C-TR,RT1P 141C
	87-A30-071-080		C-TR,RT1N 144C
	87-A30-087-080		C-FET,2SK2158
	87-A30-072-080		C-TR,RT1P 144C
	89-327-143-080		TR,2SC2714 (0.1W)
	89-505-434-540		C-FET,2SK543(4/5)
	87-A30-086-070		C-TR,CSD1306E
DIODE			
	87-070-345-080		DIODE,IN4148
	87-070-178-090		DIODE,1N5402-BD54
	87-070-274-080		DIODE,1N4003 SEM
	87-A40-345-080		ZENER,MTZJ10C
	87-A40-269-080		C-DIODE,MC2836
	87-A40-270-080		C-DIODE,MC2838
	87-A40-004-080		ZENER,MTZJ16A
	87-A40-312-080		ZENER,DZ33M
	87-A40-313-080		C-DIODE,MC 2840
	87-A40-488-080		DIODE,1SS244
	87-A40-509-080		ZENER,MTZJ6.8C
	87-017-149-080		ZENER,HZS6A2L
	87-020-465-080		DIODE,1SS133 (110MA)
POWER C.B			
C101	87-010-387-080		CAP,E 470-25 SME
C102	87-016-051-090		CAP,E 2200-35 SMG
C103	87-016-051-090		CAP,E 2200-35 SMG
C106	87-010-196-080		CHIP CAPACITOR,0.1-25
C107	87-010-196-080		CHIP CAPACITOR,0.1-25
C108	87-010-196-080		CHIP CAPACITOR,0.1-25
C109	87-010-196-080		CHIP CAPACITOR,0.1-25
C110	87-010-928-090		CAP,E 4700-25 SMG
C111	87-012-140-080		CAP 470P
C113	87-010-247-080		CAP, ELECT 100-50V<K>
C113	87-010-384-080		CAP, ELECT 100-25V<EZ>
C114	87-010-060-080		CAP, ELECT 100-16V
C115	87-010-235-080		CAP,E 470-16 SME
C132	87-010-260-080		CAP, ELECT 47-25V
C133	87-010-403-080		CAP, ELECT 3.3-50V
C151	87-010-196-080		CHIP CAPACITOR,0.1-25
C152	87-A11-174-090		CAP,E 4700-16 M SMG
C171	87-010-260-080		CAP, ELECT 47-25V
C172	87-010-513-080		CAP, ELECT 47-35V
C173	87-010-260-080		CAP, ELECT 47-25V
C174	87-010-260-080		CAP, ELECT 47-25V
C175	87-010-247-080		CAP, ELECT 100-50V
C176	87-010-263-080		CAP, ELECT 100-10V
C182	87-010-322-080		C-CAP,S 100P-50 J CH
C183	87-010-322-080		C-CAP,S 100P-50 J CH
C184	87-010-322-080		C-CAP,S 100P-50 J CH
C185	87-010-322-080		C-CAP,S 100P-50 J CH
C186	87-010-322-080		C-CAP,S 100P-50 J CH
C187	87-010-322-080		C-CAP,S 100P-50 J CH
C191	87-A10-479-080		CAP,CER 2200P-250 M E KH
C195	87-010-405-080		CAP, ELECT 10-50V<EZ>
C195	87-010-405-010		CAP, ELECT 10-50V<K>
C281	87-010-401-080		CAP, ELECT 1-50V
C282	87-010-263-080		CAP, ELECT 100-10V
C283	87-010-380-080		CAP, ELECT 47-16V
C284	87-010-405-080		CAP, ELECT 10-50V
CN101	87-A60-813-010		CONN,8P H BLK TAC-L8X
CN102	87-A60-813-010		CONN,8P H BLK TAC-L8X
CN104	87-A60-770-010		CONN,18P B TMC-D(X)
CN203	87-A60-109-010		CONN,2P V S2M-2W
CN301	87-A60-778-010		CONN,18P B TMC-D(P)
CN302	87-A60-058-010		CONN,10P V 9604S-10C
CN305	8Z-CL1-665-010		CONN ASSY,5P FR
J201	87-A60-420-010		JACK,3.5 ST (MSC)
J202	87-099-801-010		JACK,PIN 1P BLK
J501	87-A60-782-010		CONN,19P H FG
W101	8Z-CL1-656-010		F-CABLE,7P 2.5 150MM PWR
W102	8Z-CL1-654-010		F-CABLE,2P 2.5 170MM SUBPT
W103	8Z-CL1-655-010		F-CABLE,4P 2.5 100MM PWR
WH102	87-A90-460-010		HLDR,WIRE 2.5-7P
FRONT C.B			
C301	87-012-145-080		CAP, CHIP S 270P CH
C303	87-010-312-080		C-CAP,S 15P-50 CH
C304	87-015-785-080		CHIP CAPACITOR, 0.1FZ-25Z
C305	87-010-196-080		CHIP CAPACITOR,0.1-25
C341	87-010-493-080		CAP,E 0.47-50 GAS
C342	87-A10-189-040		CAP,E 220-10
C343	87-010-196-080		CHIP CAPACITOR,0.1-25
C347	87-010-405-080		CAP, ELECT 10-50V
C351	87-010-194-080		CAP, CHIP 0.047
C352	87-010-194-080		CAP, CHIP 0.047
C358	87-010-263-080		CAP, ELECT 100-10V
C371	87-010-404-080		CAP, ELECT 4.7-50V
C372	87-010-404-080		CAP, ELECT 4.7-50V
C373	87-010-408-080		CAP, ELECT 47-50V
FL301	8Z-CL1-630-010		FL,13-ST-36GNAK
HL301	8Z-CL1-204-010		HLDR,FL
L301	87-A50-052-010		COIL,CLOCK 5.76MHZ T1
LED361	87-A40-568-010		LED,L-13HD RED
POWER AMP C.B			
C201	87-010-260-080		CAP, ELECT 47-25V
C202	87-010-260-080		CAP, ELECT 47-25V
C203	87-A10-946-080		C-CAP,S 220P-100 J CH
C204	87-A10-946-080		C-CAP,S 220P-100 J CH
C209	87-010-186-080		CAP,CHIP 4700P
C210	87-010-186-080		CAP,CHIP 4700P
C211	87-012-368-080		C-CAP,S 0.1-50 F
C212	87-012-368-080		C-CAP,S 0.1-50 F
C213	87-010-195-080		C-CAP,S 0.068-25 F
C214	87-010-195-080		C-CAP,S 0.068-25 F
C215	87-010-544-080		CAP, ELECT 0.1-50V
C216	87-010-544-080		CAP, ELECT 0.1-50V
C217	87-010-182-080		C-CAP,S 2200P-50 B
C218	87-010-182-080		C-CAP,S 2200P-50 B
C219	87-010-184-080		C-CAP,S 3300P-50 B<EZ>
C220	87-010-184-080		C-CAP,S 3300P-50 B<EZ>
C221	87-010-186-080		CAP,CHIP 4700P
C222	87-010-186-080		CAP,CHIP 4700P
C223	87-010-403-080		CAP, ELECT 3.3-50V
C224	87-010-403-080		CAP, ELECT 3.3-50V

REF. NO	PART NO.	KANRI NO.	DESCRIPTION
C225	87-012-157-080		C-CAP,S 330P-50 J CH<EZ>
C226	87-012-157-080		C-CAP,S 330P-50 J CH<EZ>
C265	87-010-546-080		CAP, ELECT 0.33-50V
C266	87-010-546-080		CAP, ELECT 0.33-50V
C271	87-015-819-080		CAPACITOR,0.01
C277	87-010-197-080		CAP, CHIP 0.01 DM
CN201	87-A60-812-010		CONN,8P V BLK TAC-L8P
CN202	87-A60-812-010		CONN,8P V BLK TAC-L8P
J203	87-YP6-608-010		TERMINAL,SPKR 4P
L201	87-003-383-010		COIL,1UH-S
L202	87-003-383-010		COIL,1UH-S
R215	87-A00-258-080		RES,M/F 0.22-1W J
R216	87-A00-258-080		RES,M/F 0.22-1W J
R217	87-A00-258-080		RES,M/F 0.22-1W J
R218	87-A00-258-080		RES,M/F 0.22-1W J
R219	87-A00-258-080		RES,M/F 0.22-1W J
R220	87-A00-258-080		RES,M/F 0.22-1W J
TH201	87-A91-042-080		C-THMS,100K 55001
TH202	87-A91-042-080		C-THMS,100K 55001
MAIN PT C.B			
⚠PR151	87-A90-094-080		PROTECTOR,4A 491SERIES 60V
⚠PT101	8Z-CL1-623-010		PT,E
RY102	87-A90-976-010		RELAY,AC12V SDT-S-112LMR
⚠T101	87-A60-317-010		TERMINAL, 1P MSC
⚠T102	87-A60-317-010		TERMINAL, 1P MSC
WH101	87-A90-460-010		HLDR,WIRE 2.5-7P
SUB PT C.B			
⚠PT102	8Z-CL1-673-010		PT,SUB ZCL-1(E)
TU INF C.B			
C501	87-010-189-080		C-CAP,S 8200P-50 B<EZ>
C502	87-010-189-080		C-CAP,S 8200P-50 B<EZ>
CN114	87-099-570-010		CONN,13P TUC-P13P-B1<K>
CN115	87-A60-114-010		CONN,4P H S2M-4WR
CN116	87-A60-077-010		CONN,10P H 9604S-10F
CN117	87-A60-189-010		CONN,16P V TUC-P16P-B1<EZ>
TUNER C.B			
C701	87-010-381-080		CAP, ELECT 330-16V
C702	87-010-404-080		CAP, ELECT 4.7-50V
C703	87-012-286-080		CAP, U 0.01-25
C704	87-012-286-080		CAP, U 0.01-25
C709	87-012-195-080		C-CAP,U 100P-50CH
C711	87-010-260-080		CAP, ELECT 47-25V
C712	87-010-831-080		C-CAP,U,0.1-16F
C713	87-012-286-080		CAP, U 0.01-25
C714	87-012-286-080		CAP, U 0.01-25
C715	87-012-195-080		C-CAP,U 100P-50CH
C717	87-012-286-080		CAP, U 0.01-25
C719	87-012-286-080		CAP, U 0.01-25
C720	87-012-195-080		C-CAP,U 100P-50CH
C721	87-012-176-080		CAP 15P
C722	87-012-176-080		CAP 15P
C723	87-012-274-080		CHIP CAP,U 1000P-50B
C725	87-018-131-080		CAP, CER 1000P-50V
C727	87-010-196-080		CHIP CAPACITOR,0.1-25
C728	87-010-248-080		CAP, ELECT 220-10V
C729	87-012-274-080		CHIP CAP,U 1000P-50B
C731	87-012-286-080		CAP, U 0.01-25
C733	87-012-280-080		CAP, U 3300P-50
C734	87-012-280-080		CAP, U 3300P-50
C752	87-012-282-080		CAP, U 4700P-50
C753	87-012-195-080		C-CAP,U 100P-50CH

REF. NO	PART NO.	KANRI NO.	DESCRIPTION
C755	87-012-286-080		CAP, U 0.01-25
C756	87-012-286-080		CAP, U 0.01-25
C757	87-012-188-080		C-CAP,U 47P-50 CH
C758	87-012-167-080		C-CAP,U 5P-50 CH
C761	87-010-196-080		CHIP CAPACITOR,0.1-25
C762	87-012-286-080		CAP, U 0.01-25
C763	87-010-829-080		CAP, U 0.047-16
C765	87-012-286-080		CAP, U 0.01-25
C766	87-010-197-080		CAP, CHIP 0.01 DM
C768	87-012-286-080		CAP, U 0.01-25
C769	87-010-260-080		CAP, ELECT 47-25V
C770	87-010-829-080		CAP, U 0.047-16
C771	87-010-383-080		CAP, ELECT 33-25V
C772	87-010-829-080		CAP, U 0.047-16
C773	87-010-196-080		CHIP CAPACITOR,0.1-25
C774	87-010-263-080		CAP, ELECT 100-10V
C775	87-010-404-080		CAP, ELECT 4.7-50V
C776	87-012-286-080		CAP, U 0.01-25
C777	87-010-493-080		CAP,E 0.47-50 GAS
C778	87-010-401-080		CAP, ELECT 1-50V
C779	87-010-401-080		CAP, ELECT 1-50V
C780	87-010-196-080		CHIP CAPACITOR,0.1-25
C781	87-010-405-080		CAP, ELECT 10-50V
C782	87-010-405-080		CAP, ELECT 10-50V
C783	87-012-286-080		CAP, U 0.01-25
C784	87-012-286-080		CAP, U 0.01-25
C785	87-010-405-080		CAP, ELECT 10-50V
C786	87-010-405-080		CAP, ELECT 10-50V
C787	87-012-275-080		C-CAP,U 1200P-50 B
C788	87-012-275-080		C-CAP,U 1200P-50 B
C789	87-012-275-080		C-CAP,U 1200P-50 B
C790	87-012-275-080		C-CAP,U 1200P-50 B
C791	87-010-405-080		CAP, ELECT 10-50V
C793	87-012-273-080		C-CAP,U 820P-50 B
C794	87-010-406-080		CAP, ELECT 22-50
C795	87-010-596-080		CAP, S 0.047-16
C796	87-010-403-080		CAP, ELECT 3.3-50V
C797	87-012-276-080		CAP, CHIP SS 1500 PBK
C798	87-012-276-080		CAP, CHIP SS 1500 PBK
C799	87-010-829-080		CAP, U 0.047-16
C812	87-012-286-080		CAP, U 0.01-25
C814	87-012-286-080		CAP, U 0.01-25
C820	87-010-260-080		CAP, ELECT 47-25V
C821	87-012-286-080		CAP, U 0.01-25
C822	87-012-286-080		CAP, U 0.01-25
C823	87-012-286-080		CAP, U 0.01-25
C828	87-010-196-080		CHIP CAPACITOR,0.1-25
C829	87-010-196-080		CHIP CAPACITOR,0.1-25
C859	87-012-286-080		CAP, U 0.01-25<EZ>
C861	87-012-199-080		CAP 220P<EZ>
C862	87-012-199-080		CAP 220P<EZ>
C863	87-012-270-080		CAP, U 470P-50<EZ>
C864	87-010-405-080		CAP, ELECT 10-50V<EZ>
C865	87-010-196-080		CHIP CAPACITOR,0.1-25<EZ>
C866	87-010-405-080		CAP, ELECT 10-50V<EZ>
C867	87-012-286-080		CAP, U 0.01-25<EZ>
C868	87-012-184-080		C-CAP,U 33P-50 CH<EZ>
C869	87-012-180-080		C-CAP,U 22P-50 CH<EZ>
C940	87-012-286-080		CAP, U 0.01-25
C942	87-012-168-080		C-CAP,U 6P-50 CH
C947	87-012-286-080		CAP, U 0.01-25
C949	87-A10-039-080		C-CAP,U 470P-50 J CH
C952	87-012-286-080		CAP, U 0.01-25
C958	87-010-197-080		CAP, CHIP 0.01 DM
C959	87-010-831-080		C-CAP,U,0.1-16F
C960	87-010-196-080		CHIP CAPACITOR,0.1-25
C962	87-010-401-080		CAP, ELECT 1-50V
CF801	87-008-423-010		CERAMIC FILTER, SFE10.7
CF802	82-785-747-010		CF MS2 GHY R
CN701	87-A60-700-010		CONN,13P H GRY TUC-P13X-C1<K>

REF. NO	PART NO.	KANRI NO.	DESCRIPTION
C962	87-010-401-080		CAP, ELECT 1-50V
CF801	87-008-423-010		CERAMIC FILTER, SFE10.7
CF802	82-785-747-010		CF MS2 GHY R
CN701	87-A60-700-010		CONN,13P H GRY TUC-P13X-C1
CN701	87-A60-650-010		CONN,16P H GRY TUC-P16X-C1<EZ>
FFE801	A8-6ZA-191-130		6ZA-1 FEENM
J801	87-033-241-010		TERMINAL,ANT AJ-2039
L771	87-A50-266-010		COIL,FM DET-2N(TOK)
L772	87-A91-110-010		FLTR,PCFJZH-450 (TOK)
L781	87-005-847-080		COIL,2.2UH(CECS)
L791	87-A50-027-010		COIL,1 POLE MPX(TOK)
L792	87-A50-027-010		COIL,1 POLE MPX(TOK)
L832	87-005-847-080		COIL,2.2UH(CECS)
L851	87-005-847-080		COIL,2.2UH(CECS)<EZ>
L941	87-A50-020-010		COIL,ANT LW(COI)
L942	87-A50-019-010		COIL,OSC LW(COI)
L981	8Z-ZA1-665-010		COIL,AM PACK 2(TOK)
TC942	87-011-164-010		CAPACITOR,TRIMMER 30P
X721	87-A70-061-010		VIB,XTAL 4.500MHZ CSA-309
X851	87-A70-091-010		VIB,XTAL 4.332MHZ CSA-309<EZ>

- Regarding connectors, they are not stocked as they are not the initial order items.
  The connectors are available after they are supplied from connector manufacturers upon the order is received.

Oチップ抵抗部品コード／CHIP RESISTOR PART CODE

チップ抵抗部品コードの成り立ち
Chip Resistor Part Coding

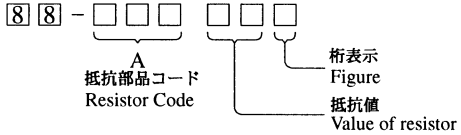

チップ抵抗
Chip resistor

容量 Wattage	種類 Type	許容誤差 Tolerance	記号 Symbol	寸法／Dimensions (mm) 外形／Form	L	W	t	抵抗コード Resistor Code : A
1/16W	1005	±5%	CJ		1.0	0.5	0.35	104
1/16W	1608	±5%	CJ		1.6	0.8	0.45	108
1/10W	2125	±5%	CJ		2	1.25	0.45	118
1/8W	3216	±5%	CJ		3.2	1.6	0.55	128

TRANSISTOR ILLUSTRATION

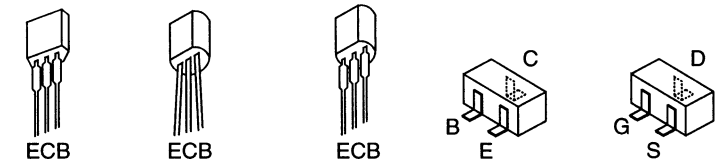

2SA933	2SA1318 2SC2001 CSD655E CSD1489B KTC3198	KTA1266	2SA1235 DTA144TK DTC114TK RT1N144C	2SK2158

FL (13-ST-36GNAK) GRID ASSIGNMENT/ANODE CONNECTION

GRID ASSIGNMENT

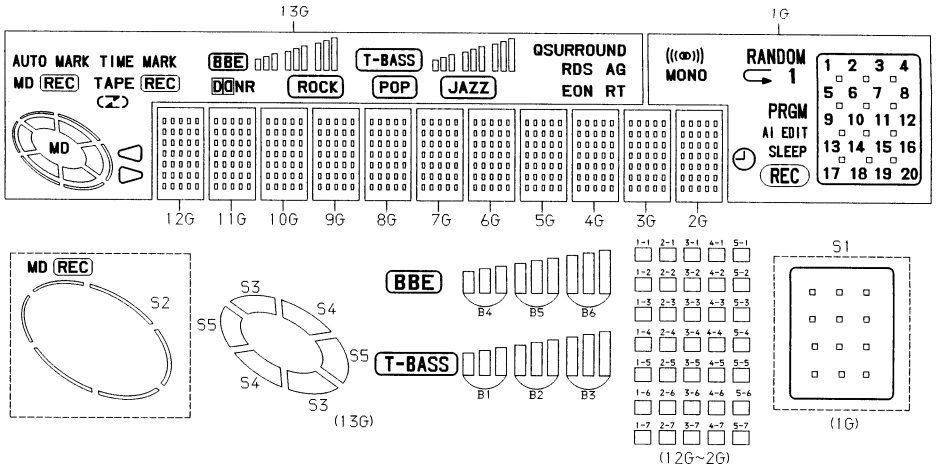

ANODE CONNECTION

	13G	12G~2G	1G
P1	JAZZ	1-1	1
P2	POP	2-1	
P3	ROCK	3-1	MONO
P4	DOLBY NR	4-1	RANDOM
P5	RT	5-1	
P6	EON	1-2	PRGM
P7	AG	2-2	AI
P8	RDS	3-2	EDIT
P9	B1	4-2	SLEEP
P10	B2	5-2	
P11	B3	1-3	REC
P12	T-BASS	2-3	(CALENDAR) 1
P13	B4	3-3	2
P14	B5	4-3	3
P15	B6	5-3	4
P16	BBE	1-4	5
P17		2-4	6
P18		3-4	7

	13G	12G~2G	1G
P19		4-4	8
P20		5-4	9
P21		1-5	10
P22	TAPE REC	2-5	11
P23	S2	3-5	12
P24	S3	4-5	13
P25	S4	5-5	14
P26	S5	1-6	15
P27	MD	2-6	16
P28	TIME MARK	3-6	17
P29	AUTO MARK	4-6	18
P30	QSURROUND	5-6	19
P31	-	1-7	20
P32	-	2-7	S1
P33	-	3-7	-
P34	-	4-7	-
P35	-	5-7	-

WIRING-1 (POWER AMP)

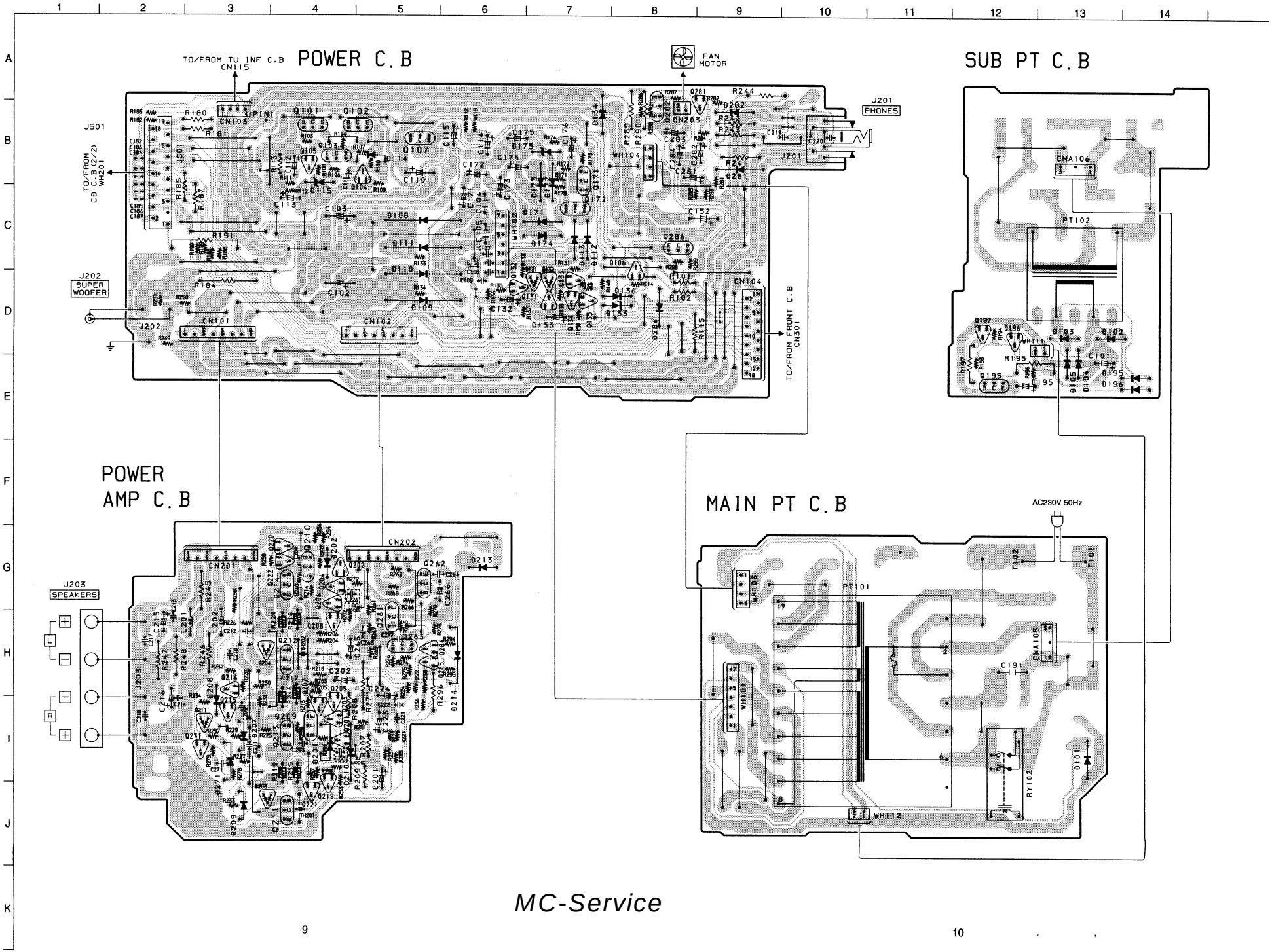

SCHEMATIC DIAGRAM-1 (POWER AMP)

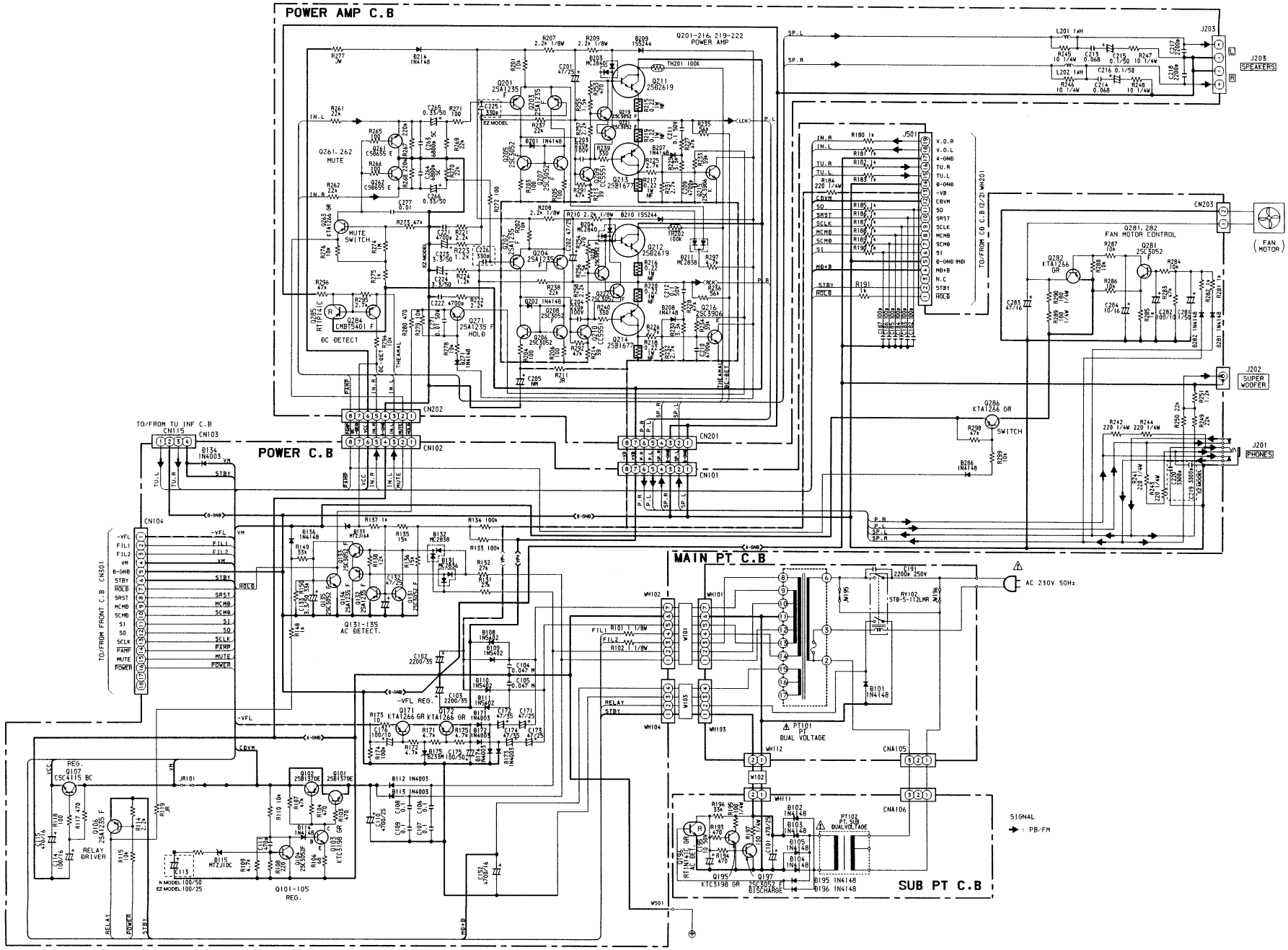

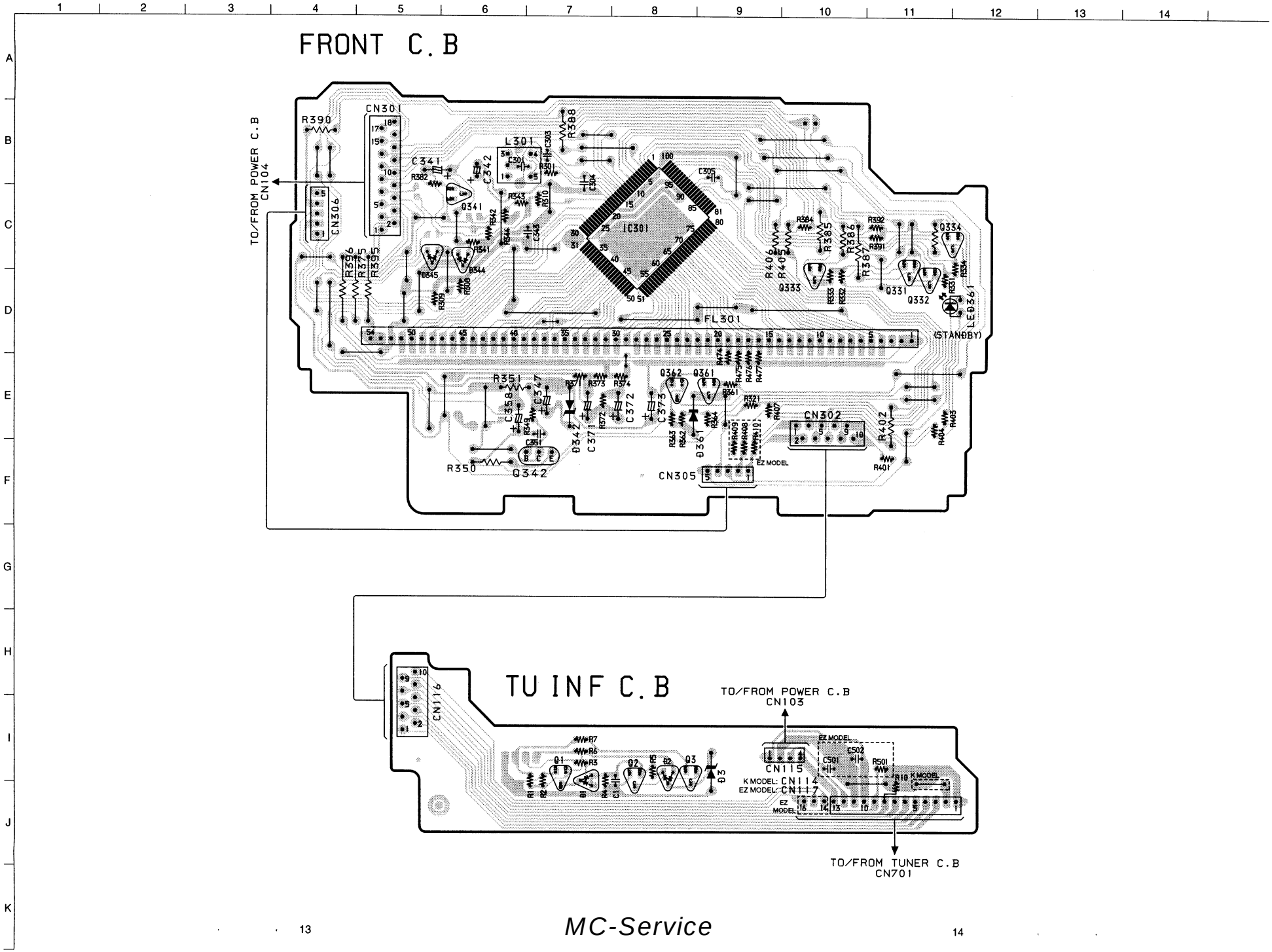
FRONT C.B
TO/FROM POWER C.B
CN104
CN301
CN306
IC301
FL301
(STANDBY)
LED361
CN302
CN305
EZ MODEL
TU INF C.B
CN116
TO/FROM POWER C.B
CN103
CN115
K MODEL: CN114
EZ MODEL: CN117
TO/FROM TUNER C.B
CN701

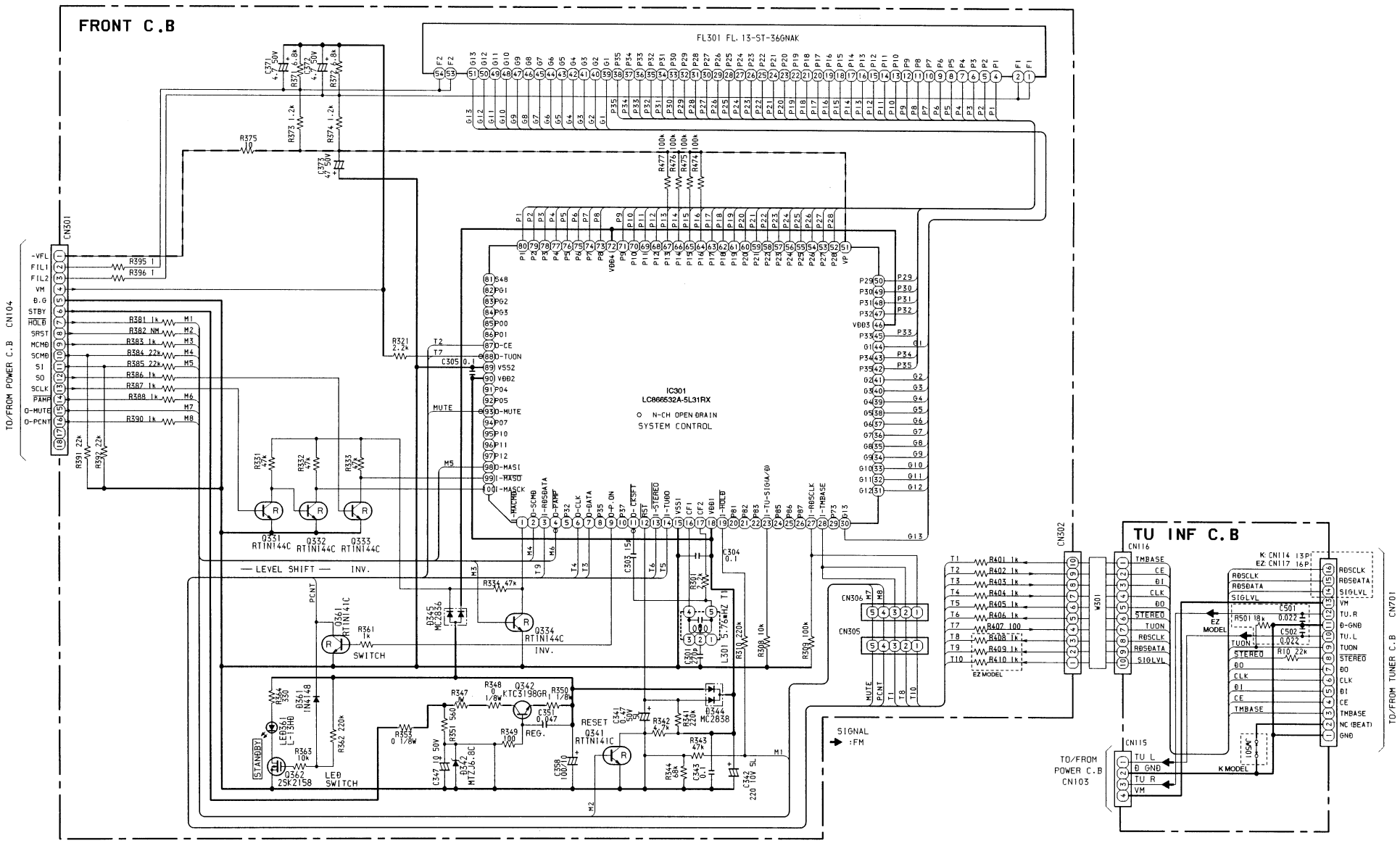
FRONT C.B
FL301 FL 13-ST-36GNAK
IC301
LC866532A-5L31RX
N-CH OPEN DRAIN
SYSTEM CONTROL
TO/FROM POWER C.B CN104
CN301
LEVEL SHIFT
INV.
SWITCH
LED SWITCH
STANDBY
REG.
RESET
SIGNAL
:FM
TO/FROM POWER C.B CN103
TU INF C.B
CN116
CN115
CN302
CN306
CN305
W301
EZ MODEL
K MODEL
TO/FROM TUNER C.B CN701

TUNER C.B

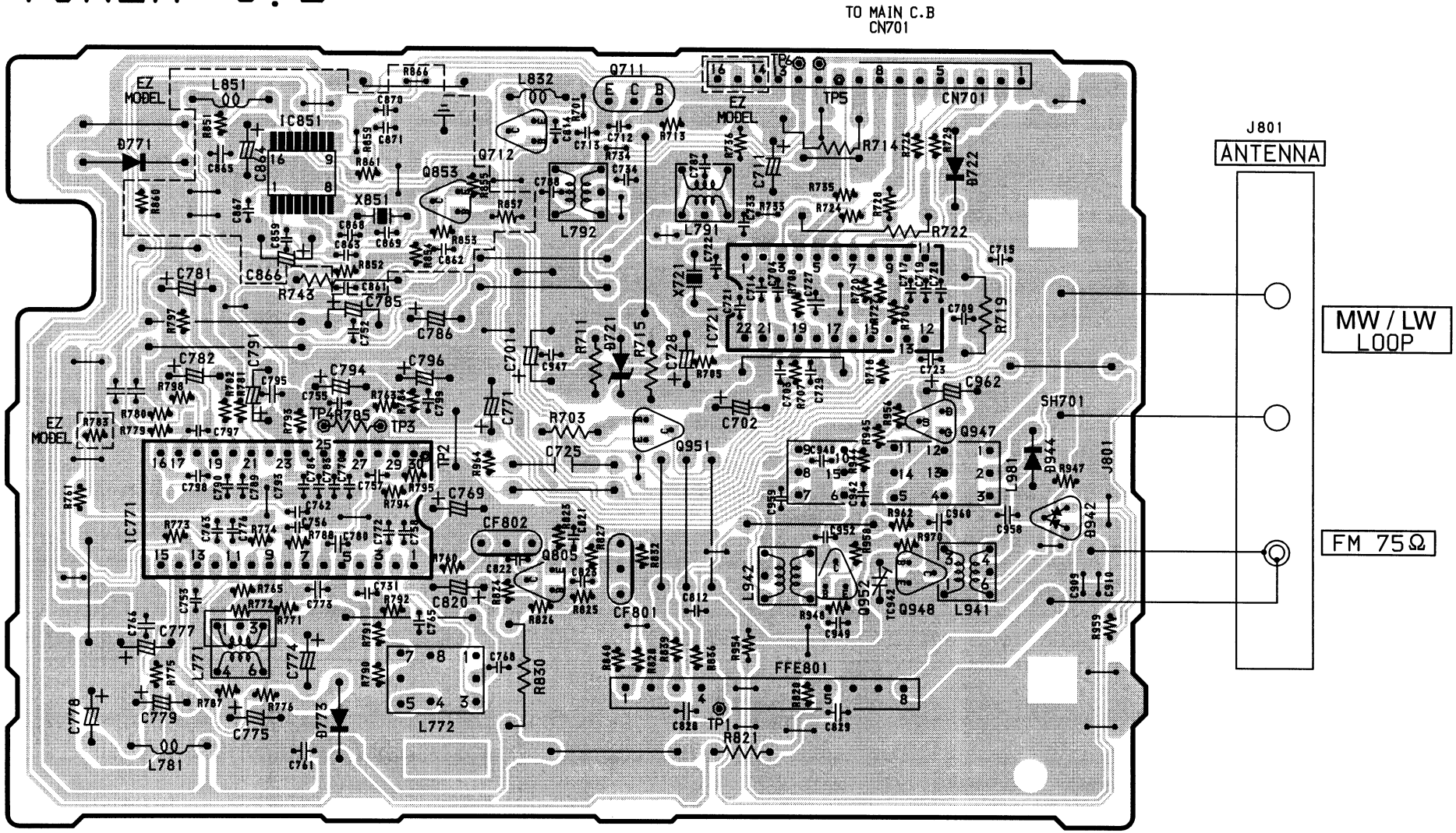
TO MAIN C.B
CN701
J801
ANTENNA
MW / LW
LOOP
FM 75Ω
EZ MODEL
IC851
IC771
IC721
FFE801
CF802
CF801
SH701

SCHEMATIC DIAGRAM-3 (TUNER)

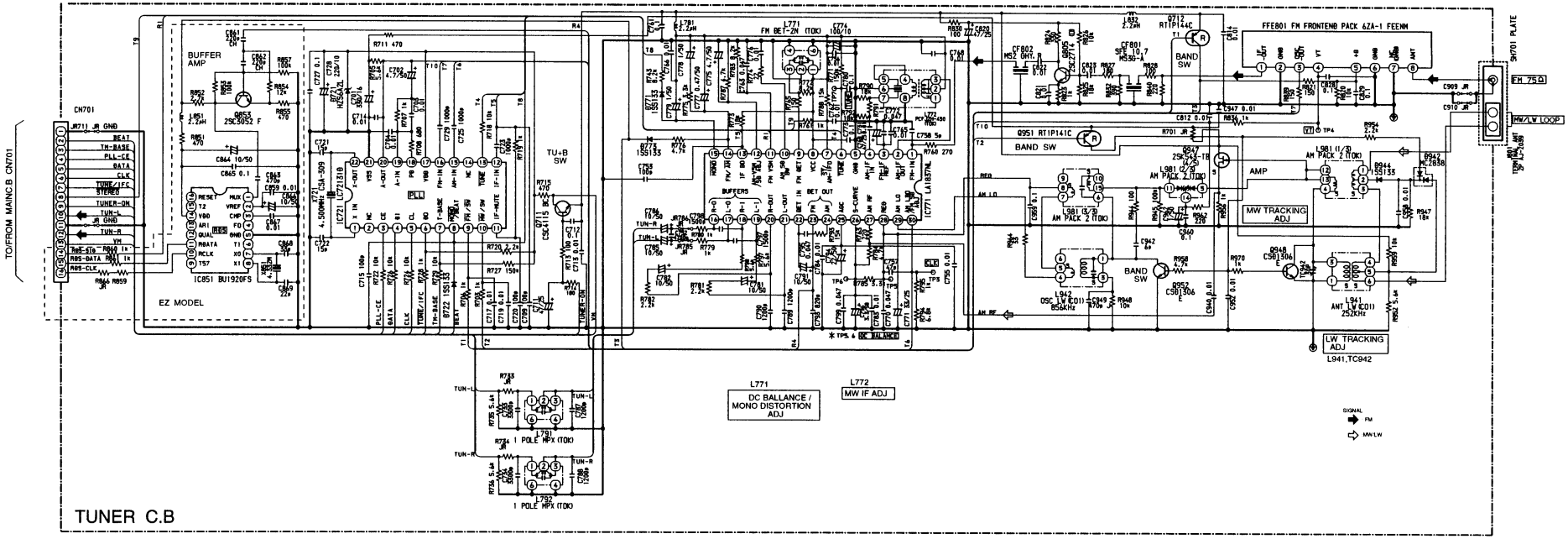

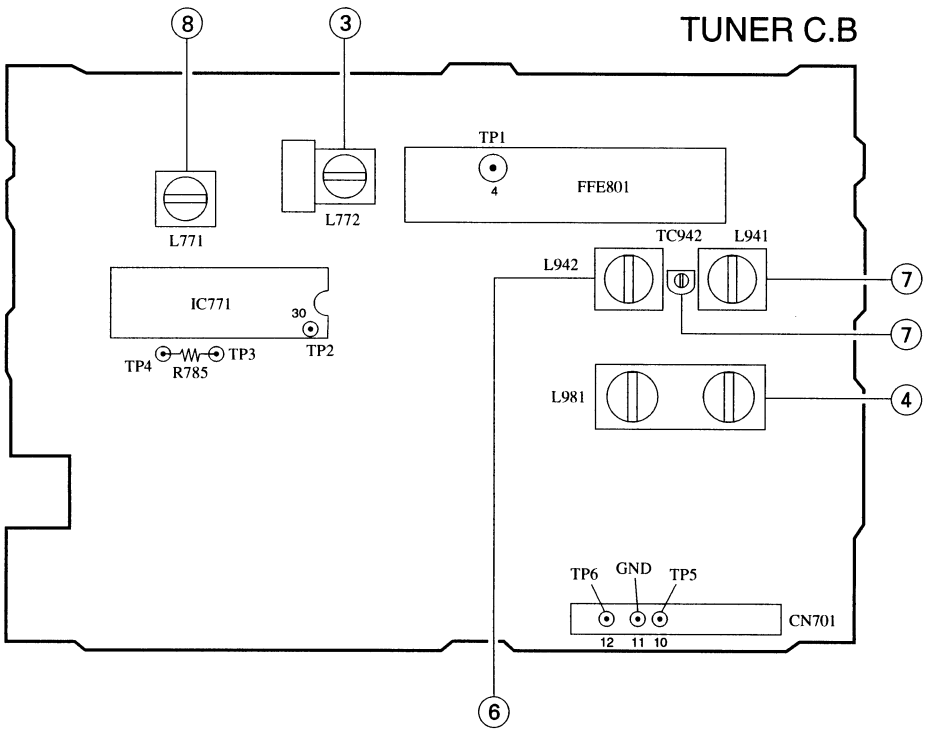

< TUNER SECTION >

1. Clock Frequency Check
   Settings: • Test point: TP2 (CLK IC770 pin30)
   Method: Set to MW 1602kHz and check that the test point becomes 2052kHz±45Hz (EZ).

2. MW VT Check
   Settings: • Test point: TP1 (VT)
   Method: Set to MW 1602kHz and check that the test point is less than 8.0V.
   Then set to MW 531kHz and check that the test point is more than 0.6V.

3. MW IF Adjustment
   Settings: • Test point: TP5, TP6
   L772 ..... 450kHz

4. MW Tracking Adjustment
   Settings: • Test point: TP5, TP6
   • Adjustment location: L981
   Method: Set to MW 999kHz and adjust L981 so that the test point becomes maximum.

5. FM VT Check
   Settings: • Test point: TP1 (VT)
   Method: Set to FM 87.5MHz, 108.0MHz and check that the test point is more than 0.5V (87.5MHz) and less than 8.0V (108.0MHz).

6. LW VT Adjustment
   Settings: • Test point: TP2 (VT)
   • Adjustment location: L942
   Method: Set to LW 144kHz and adjust L942 so that the test point becomes 1.3V±0.05V.
   Then set to LW 290kHz and check that the test point is less than 8.0V.

7. LW Tracking Adjustment
   Settings: • Test point: TP5, TP6
   • Adjustment location:
   L941 ..... 144kHz
   TC942 ..... 290kHz
   Method: Set up TC942 to center before adjustment.
   The level at 144kHz is adjusted to MAX by L941. Then the level at 290kHz is adjusted to MAX by TC942.

8. DC Balance/Mono Distortion Adjustment
   Settings: • Test point: TP3, TP4
   • Adjustment location: L771
   • Input level: 54dB
   Method: Set to FM 98.0MHz and adjust L771 so that the voltage between TP3 and TP4 becomes 0V±0.04V.
   Next, check that the distortion is less than 1.3%.

PRACTICAL SERVICE FIGURE

< TUNER SECTION >

< FM SECTION >

IHF Sensitiviy: (THD 3%)	Less than 13dB (at 108.0/98.0MHz)
	Less than 14dB (at 98.0MHz)
Distortion:	Less than 1.2% (98.0MHz)
Stereo separation:	More than 12dB (98.0MHz)
Intermediate frequency:	10.7MHz

< MW SECTION >

Sensitivity: (S/N 20dB)	Less than 60dB (at 600kHz)
	Less than 58dB (at 1000/1400kHz)
Distortion:	Less than 1.5% (at 1000kHz)

< LW SECTION >

Sensitivity:	Less than 70dB (at 144kHz)
	Less than 68dB (at 198kHz)
	Less than 66dB (at 290kHz)

IC DESCRIPTION

IC, LC866532A-5L31RX

Pin No.	Pin Name	I/O	Description
1	I-$\overline{\text{MACMD}}$	I	Command input from master microprocessor.
2	O-SCMD	O	Serial data output to master microprocessor.
3	1-RDSDATA	I	RDS data input.
4	O-$\overline{\text{PAMP}}$	O	Power supply control output (power supply ON/OFF of POWER AMP).
5	P32	—	NC.
6	O-CLK	O	Connected to TUNER PLL IC LC72131 pin-⑤ CL.
7	O-DATA	O	Connected to TUNER PLL IC LC72131 pin-④ DI.
8	P35	—	NC.
9	O-P.ON	O	Power save mode control output
10	P37	—	NC.
11	O-$\overline{\text{CKSFT}}$	O	Clock shift output. "L" at clock shift.
12	$\overline{\text{RST}}$	I	Microprocessor reset.
13	I-$\overline{\text{STEREO}}$	I	TUNER, STEREO detection.
14	I-TUDO	I	Connected to TUNER PLL IC LC72131 pin-⑥ D0.
15	VSS1	—	GND.
16	CF1	I	5.76 MHz. Connected to oscillator.
17	CF2	O	
18	VDD1	—	Microprocessor power supply (μ-com 5V).
19	I-$\overline{\text{HOLD}}$	I	Hold state detection. (Ignored by slave microprocessor)
20-22	P81-P83	—	NC.
23	I-TU-SIG	I	RDS signal level AD value input (A/D).
24-26	P85-P87	—	NC.
27	I-RDSCLK	I	RDS CLK input.
28	I-TMBASE	I	Reference clock input for watch. Connected to PLL ICLC72131 pin-⑦.
29	P73	—	NC.
30-41	G13-G2	O	FL tube grid output. (13G-2G).
42, 43	P35, P34	O	FL tube anode output. (P35, P34).
44	G1	O	FL tube grid output. (1G).
45	P33	O	FL tube anode output. (P33).
46	VDD3	—	Microprocessor power supply. (μ-com 5V).
47-50	P32-P29	O	FL tube anode output. (P32-P29).
51	VP	—	Connected to minus power supply -VFL for FL.
52-71	P28-P9	O	FL tube anode output. (P28-P9).
72	VDD4	—	Microprocessor power supply. (μ-com 5V).
73-80	P8-P1	O	FL tube anode output. (P8-P1).
81	S48	—	NC.
82-84	PG1-PG3	—	
85, 86	P00, P01	—	
87	O-CE	O	Connected to TUNER PLL IC LC72131pin-③ CE.
88	O-TUON	O	TUNER power supply. ON/OFF output.
89	VSS2	—	GND.

Pin No.	Pin Name	I/O	Description
90	VDD2	—	Microprocessor power supply. (μ-com 5V).
91, 92	P04, P05	—	NC.
93	O-MUTE	O	Main mute output.
94	P07	—	NC.
95-97	P10-12	—	
98	O-MASI	O	Serial data output to master microprocessor.
99	I-$\overline{\text{MASO}}$	I	Serial data input from master microprocessor.
100	I-MACLK	I	Transfer clock input from master microprocessor.

IC BLOCK DIAGRAM

IC, BU1920FS

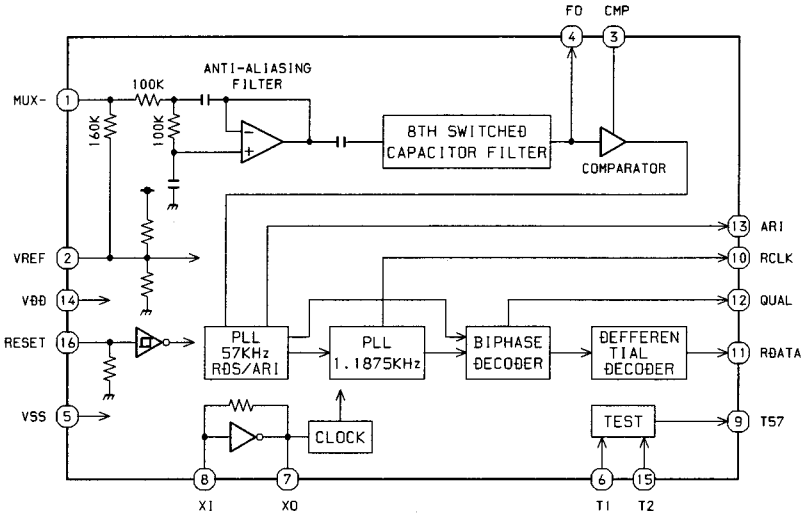

IC, LA1837

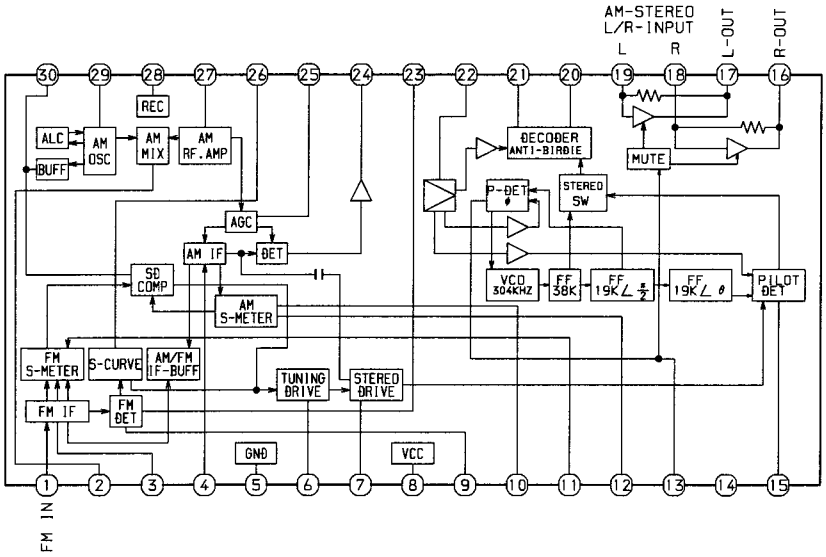

IC, LC72131

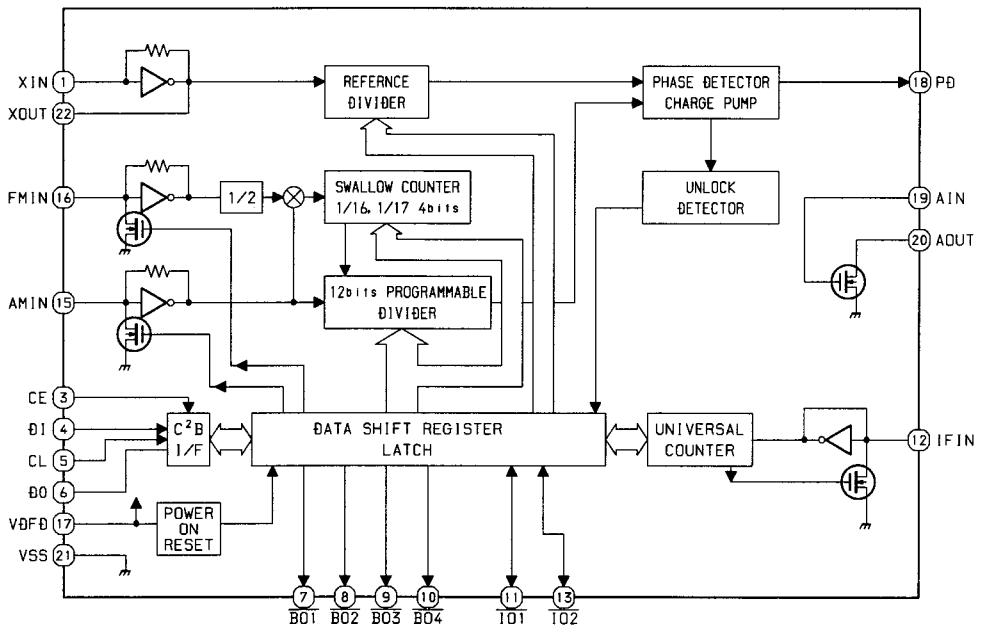

MECHANICAL EXPLODED VIEW 1/1

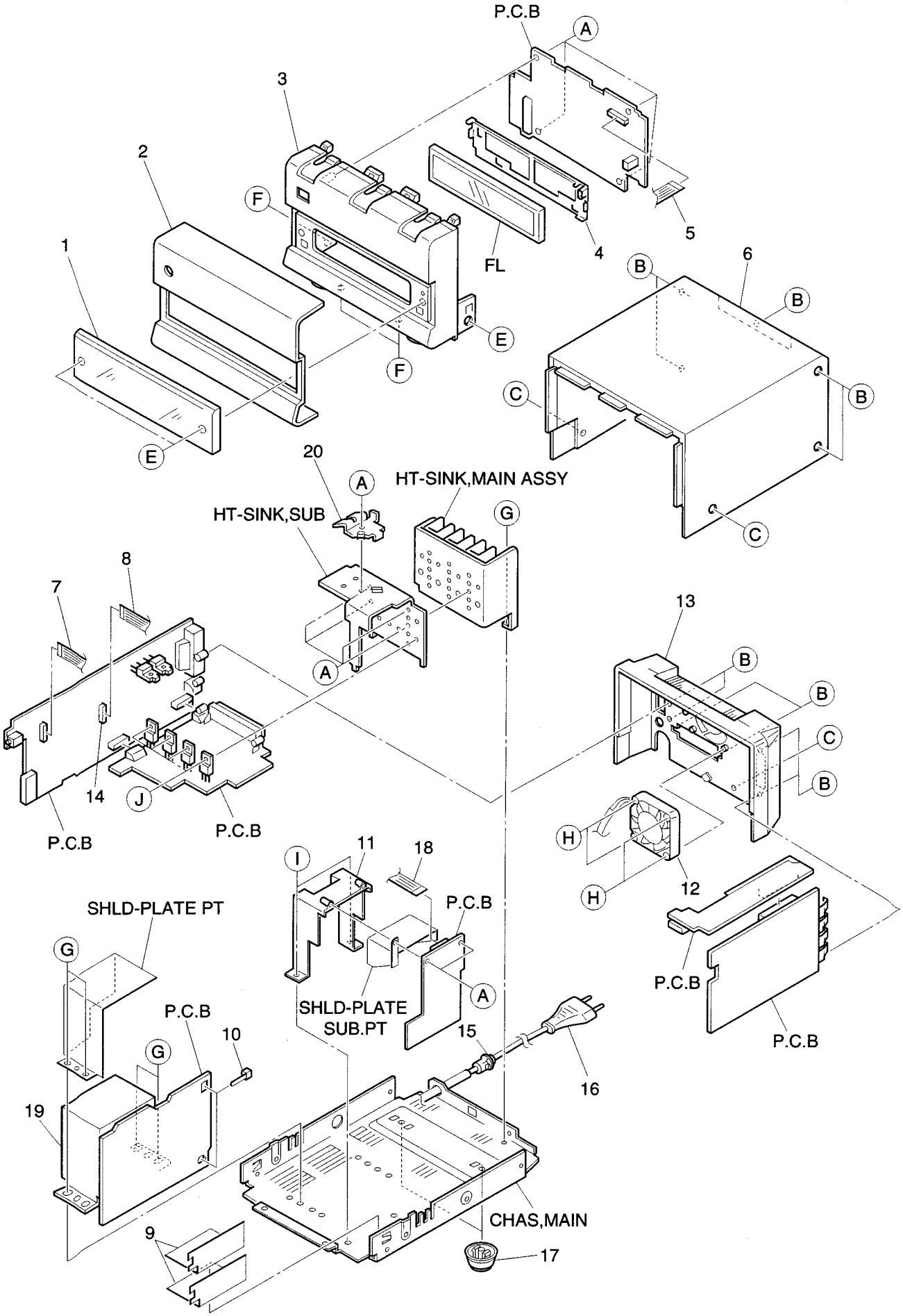

MECHANICAL PARTS LIST 1/1

DESCRIPTIONで判断できない物は "REFERENCE NAME LIST" を参照してください。
If can't understand for Description please kindly refer to "REFERENCE NAME LIST".

REF. NO	PART NO.	KANRI NO.	DESCRIPTION
1	8Z-CL1-056-010		WINDOW,DISP EX<88<K>>
1	8Z-CL1-055-010		WINDOW,DISP EZ<89<EZ>>
2	8Z-CLB-013-010		PANEL,RX CS<88<K>>
2	8Z-CLB-015-010		PANEL,RX CS EZ<89<EZ>>
3	8Z-CL1-001-010		CABI,FR RX
4	8Z-CL1-204-010		HLDR,FL
5	88-910-131-110		FF-CABLE,10P 1.25
6	8Z-CL1-003-010		CABI,TOP RX
7	8Z-CL1-655-010		F-CABLE,4P 2.5 100MM PWR
8	8Z-CL1-656-010		F-CABLE,7P 2.5 150MM PWR
9	8Z-CL1-213-010		COVER, PWB AC
10	87-A90-193-010		HLDR,CV100 (B)
11	8Z-CL1-203-010		HLDR,SUB PT
12	8Z-CL1-663-010		FAN,MF40D-12-200MM
13	8Z-CLB-073-010		PANEL,REAR RX CS EZ<89<EZ>>
13	8Z-CLB-071-010		PANEL,REAR RX CS K<88<K>>
14	87-A90-460-010		HLDR,WIRE 2.5-7P
15	87-085-185-010		BUSHING, AC CORD (E)
⚠ 16	87-A80-092-010		AC CORD ASSY,E BLK SUN FAI<89<EZ>>
⚠ 16	87-A80-007-110		AC CORD ASSY,K BLK<88<K>>
17	81-669-025-010		FOOT, H11
18	8Z-CL1-654-010		F-CABLE,2P 2.5 170MM SUBPT
⚠ 19	8Z-CL1-623-010		PT,E
20	86-NF6-211-010		HLDR,IC T1.6
A	87-067-703-010		TAPPING SCREW, BVT2+3-10
B	87-744-095-410		VT2+3-8 W/O SLOT CR2
C	87-B10-068-010		UTT2+3-6 W/O SLOT CR
D	8Z-CL1-034-010		S-SCREW,ZCL1
E	87-591-094-010		QIT+3-6 GOLD
F	87-067-761-010		TAPPING SCREW, BVT2+3-10
G	87-067-585-010		TAPPING SCREW, BVTT+4-6
H	87-751-095-410		VT2+3-8
I	87-067-584-010		TAPPING SCREW, BVT2+3-6
J	87-067-981-010		BVT2+3-6 BLK

COLOR NAME TABLE

Basic color symbol	Color	Basic color symbol	Color	Basic color symbol	Color
B	Black	C	Cream	D	Orange
G	Green	H	Gray	L	Blue
LT	Transparent Blue	N	Gold	P	Pink
R	Red	S	Silver	ST	Titan Silver
T	Brown	V	Violet	W	White
WT	Transparent White	Y	Yellow	YT	Transparent Yellow
LM	Metallic Blue	LL	Light Blue	GT	Transparent Green
LD	Dark Blue	DT	Transparent Orange		

MODEL NO. FD-LM88

DISASSEMBLY INSTRUCTIONS

1. Remove the two screws.

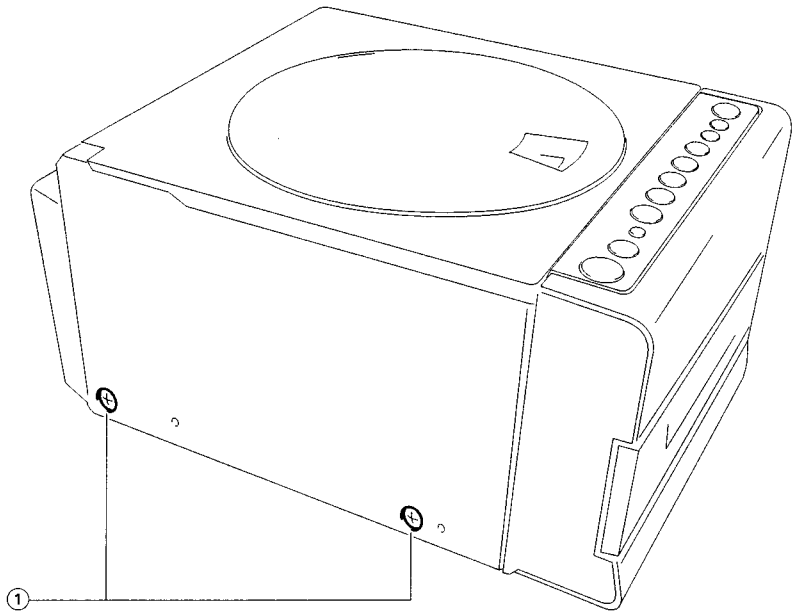

2. Remove the two screws.

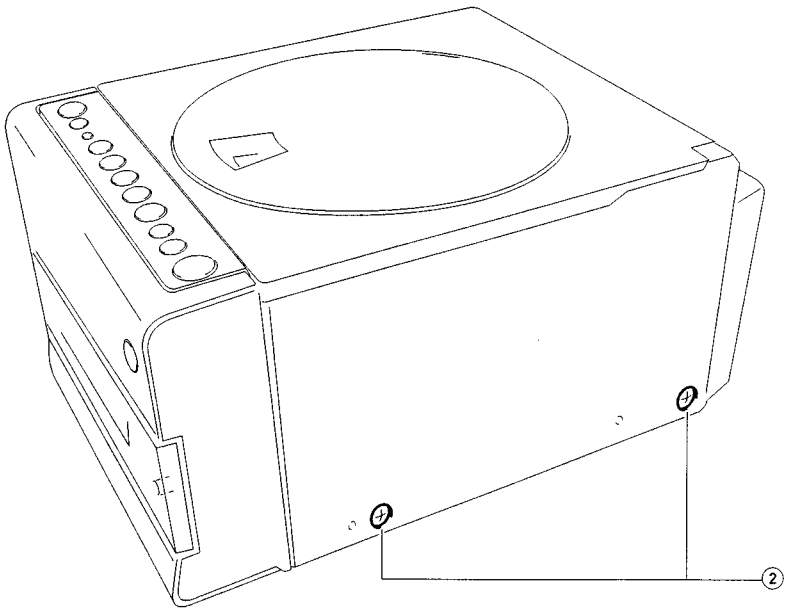

3. Remove the eight screws and remove the PANEL, REAR FD.

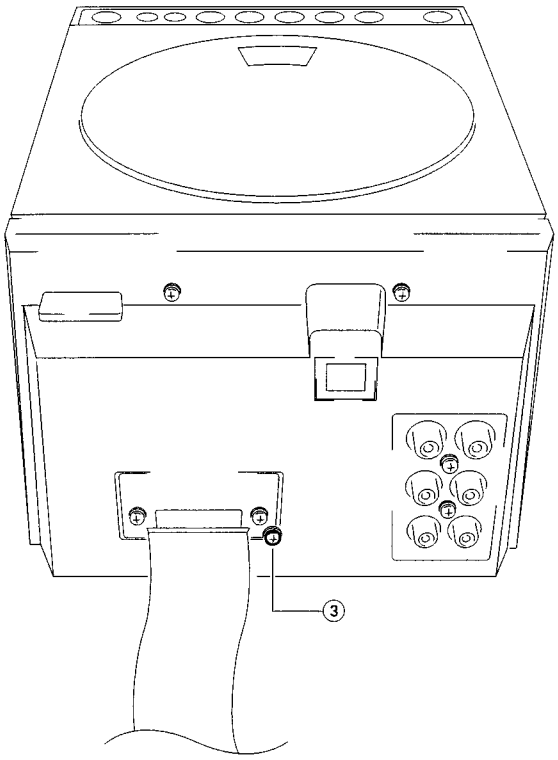

4. While moving up the rear of the PANEL, TOP, remove the PANEL, TOP by pulling it to the front.

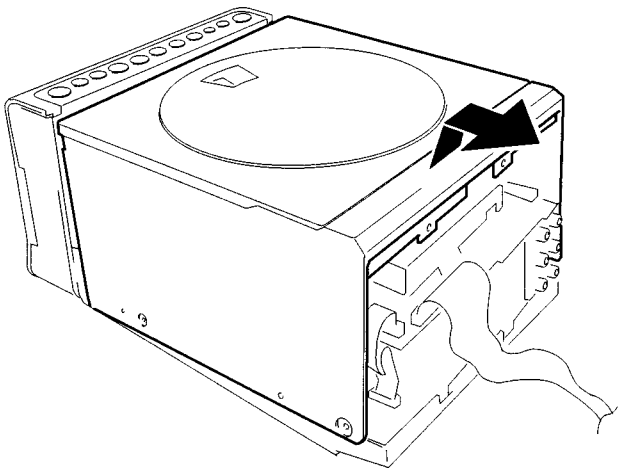

5. Remove the FFC and cord. Be careful that the FFC especially cannot be removed easily.

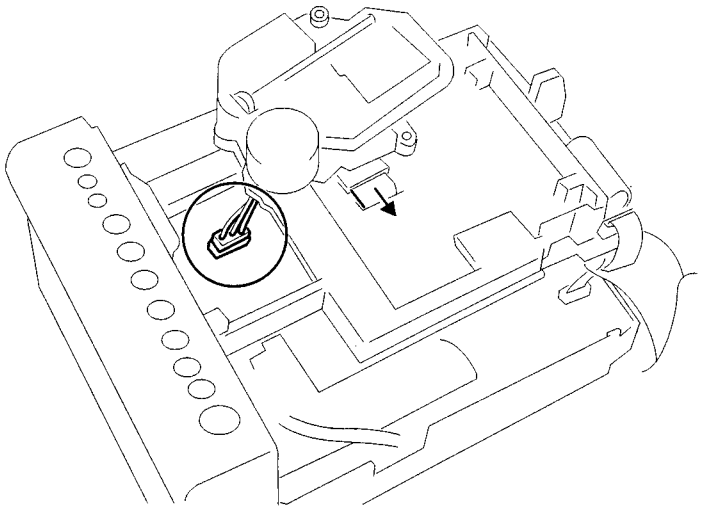

6. Remove the screws.

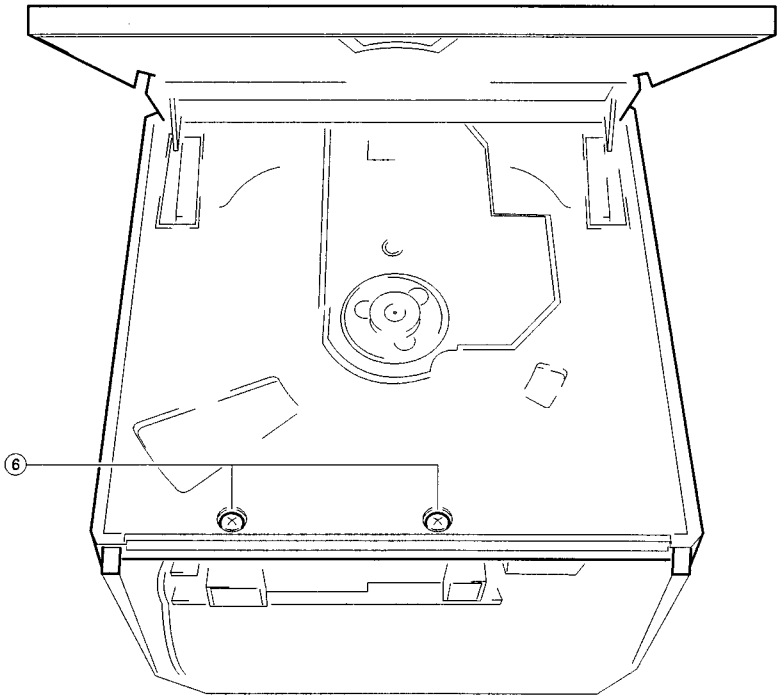

7. Remove the two FFCs.

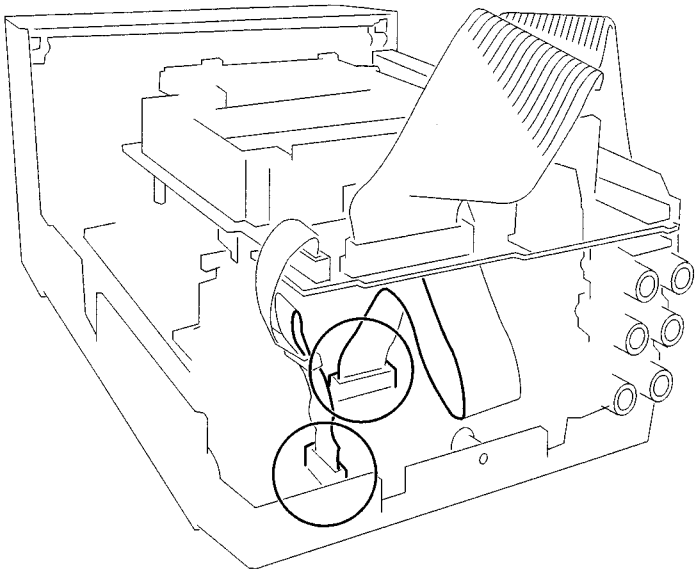

8. Remove the claw and remove the CABI FRFD together with the entire front board.

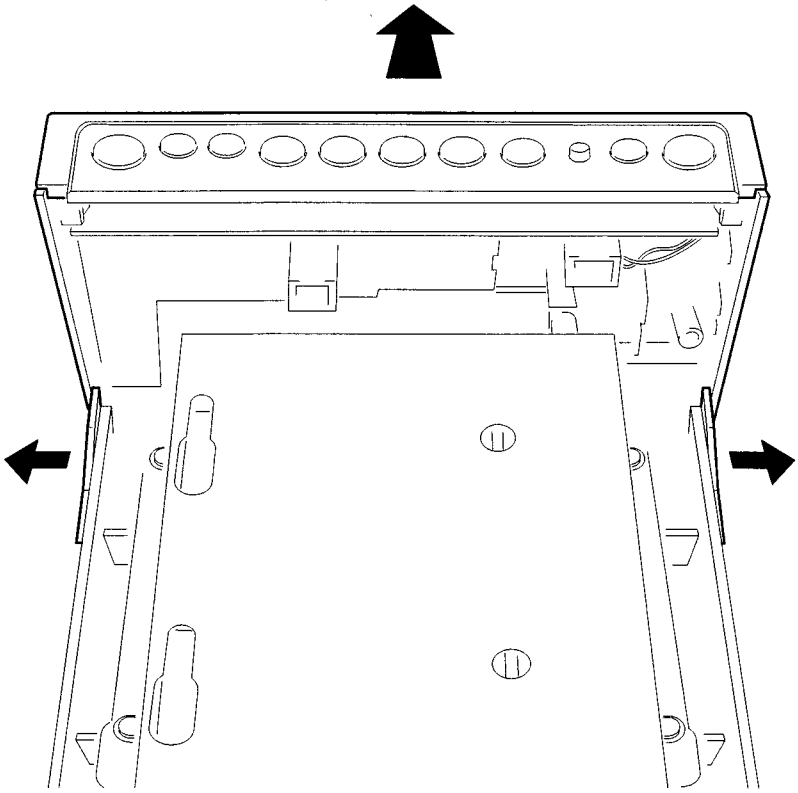

9. While moving up the CD board and the function board, remove the CD board and the function board. You can locate the mechanism deck.

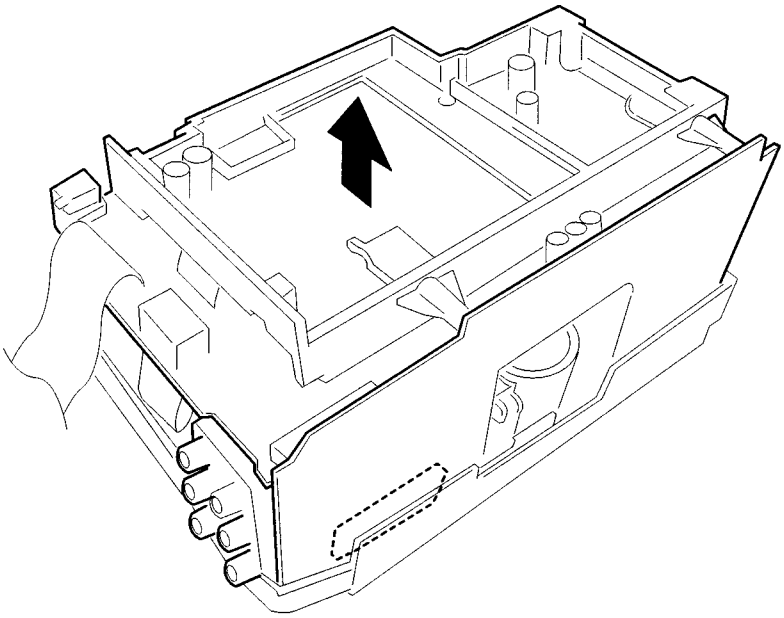

ELECTRICAL MAIN PARTS LIST

DESCRIPTIONで判断できない物は "REFERENCE NAME LIST" を参照してください。
If can't understand for Description please kindly refer to "REFERENCE NAME LIST".

REF. NO	PART NO.	KANRI NO.	DESCRIPTION
IC			
	87-A20-446-010		C-IC,LA9241ML
	87-A20-459-010		C-IC,LC78622ED
	87-A20-445-010		IC,BA5936
	8Z-CLB-621-010		C-IC,LC866560-5M02FD
	87-A20-455-010		IC,HA12211
	87-001-982-010		IC,TA7291S
	87-A21-111-040		C-IC,M62495FP
	87-A21-022-040		C-IC,BA3880FS
	87-A21-103-040		C-IC,MM1454XFBE
	87-017-888-080		IC,NJM4558MD
	87-A20-914-010		IC,SPS-442-1-F
TRANSISTOR			
	87-026-463-080		TR,2SA933S (0.3W)
	89-113-184-080		TR,2SA1318T
	87-026-297-080		TR,DTA144TK
	87-026-239-080		TR,DTC114TK (0.2W)
	87-A30-047-080		TR,CSD655E
	87-A30-075-080		C-TR,2SA1235F
	87-026-610-080		TR,KTC3198GR
	87-A30-083-080		TR,CSD1489B
	87-A30-071-080		C-TR,RT1N 144C
	87-A30-087-080		C-FET,2SK2158
	87-A30-076-080		C-TR,2SC3052F
	89-320-011-080		TR,2SC2001K
	87-026-609-080		TR,KTA1266GR
DIODE			
	87-020-465-080		DIODE,1SS133 (110MA)
	87-A40-270-080		C-DIODE,MC2838
	87-A40-509-080		ZENER,MTZJ6.8C
	87-070-274-080		DIODE,1N4003 SEM
	87-A40-269-080		C-DIODE,MC2836
	87-017-931-080		ZENER,MTZJ5.6B
	87-A40-292-080		ZENER,DZ2.7L
	87-001-731-080		ZENER,HZS6C2L
CD C.B			
C1	87-010-496-040		CAP,E 3.3-50 GAS
C2	87-010-197-080		CAP, CHIP 0.01 DM
C3	87-010-264-040		CAP,E 100-10 5L
C4	87-A10-189-040		CAP,E 220-10
C5	87-010-197-080		CAP, CHIP 0.01 DM
C6	87-010-553-040		CAP,E 47-16 GAS
C7	87-012-349-080		C-CAP,S 1000P-50 CH
C8	87-010-198-080		CAP, CHIP 0.022
C9	87-010-264-040		CAP,E 100-10 5L
C10	87-010-264-040		CAP,E 100-10 5L
C12	87-010-494-040		CAP,E 1-50 GAS
C13	87-010-193-080		CHIP CAPACITOR,0.033
C14	87-010-560-040		CAP,E 10-50 GAS
C16	87-010-491-040		CAP,E 0.22-50 GAS
C17	87-012-349-080		C-CAP,S 1000P-50 CH
C18	87-010-213-080		C-CAP,S 0.015-50 B
C20	87-010-193-080		CHIP CAPACITOR,0.033
C22	87-010-184-080		CHIP CAPACITOR 3300P(K)
C23	87-010-992-080		C-CAP,S 0.047-25 B
C25	87-012-349-080		C-CAP,S 1000P-50 CH
C27	87-010-176-080		C-CAP,S 680P-50 SL
C29	87-010-186-080		CAP,CHIP 4700P
C30	87-012-156-080		C-CAP,S 220P-50 CH
C31	87-010-493-040		CAP,E 0.47-50 GAS
C32	87-010-553-040		CAP,E 47-16 GAS
C33	87-010-494-040		CAP,E 1-50 GAS
C34	87-010-184-080		CHIP CAPACITOR 3300P(K)
C35	87-010-197-080		CAP, CHIP 0.01 DM
C36	87-010-553-040		CAP,E 47-16 GAS
C37	87-010-404-040		CAP,E 4.7-50 SME
C38	87-010-196-080		CHIP CAPACITOR,0.1-25
C40	87-010-145-080		C-CAP,S 1P-50 CH
C42	87-010-315-080		C-CAP,S 27P-50 CH
C45	87-010-196-080		CHIP CAPACITOR,0.1-25
C46	87-010-196-080		CHIP CAPACITOR,0.1-25
C47	87-010-196-080		CHIP CAPACITOR,0.1-25
C48	87-010-315-080		C-CAP,S 27P-50 CH
C50	87-012-140-080		CAP 470P
C51	87-012-156-080		C-CAP,S 220P-50 CH
C55	87-010-264-040		CAP,E 100-10 5L
C57	87-010-316-080		C-CAP,S 33P-50 CH
C58	87-010-316-080		C-CAP,S 33P-50 CH
C59	87-010-264-040		CAP,E 100-10 5L
C60	87-010-196-080		CHIP CAPACITOR,0.1-25
C61	87-010-196-080		CHIP CAPACITOR,0.1-25
C62	87-010-370-040		CAP,E 330-6.3 SME
C65	87-010-497-040		CAP,E 4.7-35 GAS
C66	87-010-196-080		CHIP CAPACITOR,0.1-25
C67	87-010-264-040		CAP,E 100-10 5L
C68	87-010-322-080		C-CAP,S 100P-50 CH
C75	87-010-197-080		CAP, CHIP 0.01 DM
C76	87-A10-102-080		CAP,E 1000-10 REA
C79	87-010-264-040		CAP,E 100-10 5L
C80	87-010-197-080		CAP, CHIP 0.01 DM
C81	87-010-560-040		CAP,E 10-50 GAS
C82	87-010-560-040		CAP,E 10-50 GAS
C83	87-012-157-080		C-CAP,S 330P-50 CH
C84	87-012-157-080		C-CAP,S 330P-50 CH
C93	87-010-197-080		CAP, CHIP 0.01 DM
C94	87-010-197-080		CAP, CHIP 0.01 DM
C98	87-012-154-080		C-CAP,S 150P-50 CH
C102	87-010-322-080		C-CAP,S 100P-50 CH
C104	87-010-322-080		C-CAP,S 100P-50 CH
C105	87-010-322-080		C-CAP,S 100P-50 CH
C110	87-010-196-080		CHIP CAPACITOR,0.1-25
C141	87-016-460-080		C-CAP,S 0.22-16 B
C146	87-010-560-040		CAP,E 10-50 GAS
C150	87-010-264-040		CAP,E 100-10 5L
C151	87-010-197-080		CAP, CHIP 0.01 DM
C201	87-012-145-080		CAP, CHIP S 270P CH
C203	87-010-312-080		C-CAP,S 15P-50 CH
C204	87-015-785-080		CHIP CAPACITOR, 0.1FZ-25Z
C205	87-010-196-080		CHIP CAPACITOR,0.1-25
C210	87-012-349-080		C-CAP,S 1000P-50 CH
C217	87-010-498-040		CAP,E 10-16 GAS
C220	87-010-197-080		CAP, CHIP 0.01 DM
C221	87-010-235-080		CAP,E 470-16 SME
C222	87-010-101-080		CAP, ELECT 220-16
C223	87-010-381-080		CAP, ELECT 330-16V
C241	87-010-493-040		CAP,E 0.47-50 GAS
C242	87-A10-759-040		CAP,E 330-6.3 SRM
C243	87-010-196-080		CHIP CAPACITOR,0.1-25
C246	87-010-196-080		CHIP CAPACITOR,0.1-25
C251	87-010-194-080		CAP, CHIP 0.047
C254	87-010-264-040		CAP,E 100-10 5L
C473	87-010-221-080		CAP, ELECT 470-10V
C474	87-010-197-080		CAP, CHIP 0.01 DM
CN1	87-A60-429-010		CONN,16P H TOC-A
CN2	87-009-411-010		CONN,6P ZH V
CN3	87-A60-111-010		CONN,5P V S2M 5W
CN201	87-A60-424-010		CONN,16P V TOC-B
CN202	87-A60-957-010		CONN,9P V TOC-B
CN203	87-A60-826-010		CONN,6P B TMC-D(X)
CN204	87-099-559-010		CONN,13P TUC-P13X-B1
D150	87-A40-558-010		LED,SLZ-8128A-01-A
L1	87-003-102-080		COIL, 10UH
L4	87-003-152-080		COIL, 100UH

REF. NO	PART NO.	KANRI NO.	DESCRIPTION
L150	87-003-171-010		COIL, 15UH FL5R100
L201	87-A50-052-010		COIL,CLOCK 5.76MHZ T1
SFR130	87-A90-787-080		SFR,100K H HOKU
W201	8Z-CL1-653-010		F-CABLE,19P 1.5 FG
WH201	87-A90-878-010		HLDR,WIRE 19P 1.5 51016
X1	87-A70-046-010		VIB,XTAL 16.934MHZ

TAPE C.B

REF. NO	PART NO.	KANRI NO.	DESCRIPTION
C90	87-010-197-080		CAP, CHIP 0.01 DM
C91	87-015-684-040		CAP,E 47-16 7L
C92	87-015-686-040		CAP,E 22-25 M 7L SRA
C303	87-012-157-080		C-CAP,S 330P-50 CH
C304	87-012-157-080		C-CAP,S 330P-50 CH
C307	87-010-196-080		CHIP CAPACITOR,0.1-25
C311	87-010-198-080		CAP, CHIP 0.022
C312	87-010-198-080		CAP, CHIP 0.022
C315	87-010-182-080		C-CAP,S 2200P-50
C316	87-010-182-080		C-CAP,S 2200P-50
C321	87-A10-201-080		C-CAP,S0.33-16 KB
C322	87-A10-201-080		C-CAP,S0.33-16 KB
C325	87-010-807-080		CAP,E 330-6.3 SR
C327	87-015-692-040		CAP,E 0,22-50 KB
C328	87-015-692-040		CAP,E 0,22-50 KB
C332	87-010-196-080		CHIP CAPACITOR,0.1-25
C335	87-015-695-040		E/CAP 1UF 50V TAPG
C336	87-015-695-040		E/CAP 1UF 50V TAPG
C337	87-010-196-080		CHIP CAPACITOR,0.1-25
C351	87-012-140-080		CAP 470P
C352	87-012-140-080		CAP 470P
C354	87-010-175-080		CAP 560P
C355	87-010-176-080		C-CAP,S 680P-50 J
C356	87-015-684-040		CAP,E 47-16 7L
C358	87-010-187-080		C-CAP,S 5600P-50 K B
C359	87-010-197-080		C-CAP,S 0.01-25 K B
C360	87-010-187-080		C-CAP,S 5600P-50 J
C370	87-010-196-080		CHIP CAPACITOR,0.1-25
C379	87-015-697-040		CAP,E 3.3-50 M 7L SRA
C380	87-015-697-040		CAP,E 3.3-50 M 7L SRA
C391	87-012-153-080		C-CAP,S 120P-50 J CH
C392	87-012-153-080		C-CAP,S 120P-50 J CH
C399	87-015-683-040		CAP,E 33-16 M 7L SRA
C401	87-010-197-080		CAP, CHIP 0.01 DM
C402	87-010-060-040		CAP,E 100-16
C403	87-015-684-040		CAP,E 47-16 7L
C404	87-A10-924-040		CAP,E 47-16 BP SME
C441	87-015-677-040		CAP,E 100-6.3 7L
C442	87-018-211-080		CAP, CER 0.01-50
C454	87-010-175-080		CAP 560P
C455	87-010-176-080		C-CAP,S 680P-50 CH
C456	87-015-684-040		CAP,E 47-16 7L
C458	87-010-187-080		C-CAP,S 5600P-50 KB
C459	87-010-197-080		C-CAP,S 0.01-25 KB
C460	87-010-187-080		C-CAP,S 5600P-50 K B
CN301	87-A60-957-010		CONN,9P V TOC-B
CN302	87-A60-057-010		CONN,11P V 9604S-11C
CN401	87-A60-424-010		CONN,16P V TOC-B
CN402	87-A60-957-010		CONN,9P V TOC-B
CN403	87-099-668-010		CONN,9P TUC-P 9P-B1
L301	87-A50-049-010		COIL,TRAP 85K(COI)
L302	87-A50-049-010		COIL,TRAP 85K(COI)
L351	87-A50-500-010		COIL,OSC BIAS 85KHZ
L451	87-A50-500-010		COIL,OSC BIAS 85KHZ
RY301	87-A91-375-010		RELAY,AC DC12V G6S-2
RY302	87-A91-375-010		RELAY,AC DC12V G6S-2
RY303	87-A91-375-010		RELAY,AC DC12V G6S-2
SFR351	87-024-436-080		SFR,47K RH063EC
SFR352	87-024-436-080		SFR,47K RH063EC
SFR451	87-024-436-080		SFR,47K RH063EC
SFR452	87-024-436-080		SFR,47K RH063EC

FUNCTION C.B

REF. NO	PART NO.	KANRI NO.	DESCRIPTION
C501	87-010-197-080		CAP, CHIP 0.01 DM
C531	87-010-374-040		CAP,E 47-10
C532	87-010-374-040		CAP,E 47-10
C535	87-010-213-080		C-CAP,S 0.015-50 B
C536	87-010-213-080		C-CAP,S 0.015-50 B
C537	87-010-400-040		CAP,E 0.47-50
C538	87-010-400-040		CAP,E 0.47-50
C539	87-010-564-040		CAP,E 0.33-50 M
C540	87-010-564-040		CAP,E 0.33-50 M
C541	87-010-401-040		CAP,E 1-50 SME
C542	87-010-401-040		CAP,E 1-50 SME
C543	87-010-154-080		CAP CHIP 10P
C583	87-010-182-080		C-CAP,S 2200P-50 K B
C584	87-010-182-080		C-CAP,S 2200P-50 K B
C591	87-010-180-080		C-CER 1500P
C592	87-010-180-080		C-CER 1500P
C603	87-010-402-040		CAP,E 2.2-50 SME
C604	87-010-402-040		CAP,E 2.2-50 SME
C605	87-010-408-040		CAP,E 47-50 SME
C607	87-010-405-040		CAP,E 10-50
C608	87-010-405-040		CAP,E 10-50
C609	87-010-196-080		CHIP CAPACITOR,0.1-25
C610	87-010-384-040		CAP,E 100-25 SME
C611	87-010-197-080		CAP, CHIP 0.01 DM
C612	87-010-197-080		CAP, CHIP 0.01 DM
C621	87-010-401-040		CAP,E 1-50 SME
C622	87-010-401-040		CAP,E 1-50 SME
C653	87-010-404-040		CAP,E 4.7-50 SME
C654	87-010-404-040		CAP,E 4.7-50 SME
C655	87-010-404-040		CAP,E 4.7-50 SME
C656	87-010-404-040		CAP,E 4.7-50 SME
C657	87-010-188-080		CAP,CHIP 6800P
C658	87-010-188-080		CAP,CHIP 6800P
C659	87-012-140-080		CAP 470P
C660	87-012-140-080		CAP 470P
C662	87-010-260-040		CAP,E 47-25 SME
C665	87-010-197-080		CAP, CHIP 0.01 DM
C666	87-010-197-080		CAP, CHIP 0.01 DM
C667	87-010-598-080		C-CAP,S 0.068-16VRK
C668	87-010-598-080		C-CAP,S 0.068-16VRK
C669	87-010-260-040		CAP,E 47-25 SME
C670	87-010-196-080		CHIP CAPACITOR,0.1-25
C671	87-010-545-040		CAP,E 0.22-50
C672	87-010-545-040		CAP,E 0.22-50
C677	87-010-404-040		CAP,E 4.7-50 SME
C678	87-010-404-040		CAP,E 4.7-50 SME
C721	87-010-401-040		CAP,E 1-50 SME
C722	87-010-401-040		CAP,E 1-50 SME
C723	87-012-154-080		C-CAP,S 150P-50 CH
C724	87-012-154-080		C-CAP,S 150P-50 CH
C725	87-012-154-080		C-CAP,S 150P-50 CH
C726	87-012-154-080		C-CAP,S 150P-50 CH
C727	87-010-404-040		CAP,E 4.7-50 SME
C728	87-010-404-040		CAP,E 4.7-50 SME
C733	87-010-197-080		CAP, CHIP 0.01 DM
C734	87-010-381-080		CAP, ELECT 330-16V
C735	87-010-197-080		CAP, CHIP 0.01 DM
C851	87-A10-201-080		C-CAP,S0.33-16 KB
C852	87-010-384-040		CAP,E 100-25 SME
C853	87-010-400-040		CAP,E 0.47-50
C854	87-010-402-040		CAP,E 2.2-50 SME
CN503	87-099-670-010		CONN,9P TUC-P9X-B1
CN504	87-099-570-010		CONN,13P TUC-P13P-B1
J501	82-MA2-631-010		JACK PIN 4P RVS
J701	87-A60-354-010		JACK,PIN 2P MSP -242V-05

REF. NO	PART NO.	KANRI NO.	DESCRIPTION
KEY C.B			
S801	87-A91-024-080		SW,TACT KSH0611BT
S802	87-A91-024-080		SW,TACT KSH0611BT
S803	87-A91-024-080		SW,TACT KSH0611BT
S804	87-A91-024-080		SW,TACT KSH0611BT
S805	87-A91-024-080		SW,TACT KSH0611BT
S806	87-A91-024-080		SW,TACT KSH0611BT
S807	87-A91-024-080		SW,TACT KSH0611BT
S808	87-A91-024-080		SW,TACT KSH0611BT
S809	87-A91-024-080		SW,TACT KSH0611BT
S810	87-A91-024-080		SW,TACT KSH0611BT
S811	87-A91-024-080		SW,TACT KSH0611BT
RMC C.B			
C841	87-010-405-040		CAP,E 10-50
CN801	87-A60-827-010		CONN,6P B TMC-D(P)
S821	87-A91-024-080		SW,TACT KSH0611BT

REF. NO	PART NO.	KANRI NO.	DESCRIPTION
MOTOR C.B			
CNA101	88-802-051-290		CONN ASSY,5P
CNA103	8Z-CL1-670-010		CONN ASSY,3P H O/C
DOOR SW C.B			
S101	87-036-109-010		PUSH SWITCH
S102	87-036-109-010		PUSH SWITCH

- Regarding connectors, they are not stocked as they are not the initial order items.
  The connectors are available after they are supplied from connector manufacturers upon the order is received.

Oチップ抵抗部品コード／CHIP RESISTOR PART CODE

チップ抵抗部品コードの成り立ち
Chip Resistor Part Coding

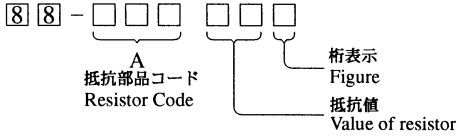

チップ抵抗
Chip resistor

容量 Wattage	種類 Type	許容誤差 Tolerance	記号 Symbol	寸法／Dimensions (mm) 外形／Form	L	W	t	抵抗コード : A Resistor Code : A
1/16W	1005	±5%	CJ		1.0	0.5	0.35	104
1/16W	1608	±5%	CJ		1.6	0.8	0.45	108
1/10W	2125	±5%	CJ		2	1.25	0.45	118
1/8W	3216	±5%	CJ		3.2	1.6	0.55	128

TRANSISTOR ILLUSTRATION

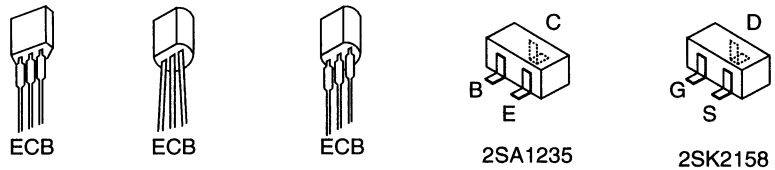

2SA933

2SA1318
2SC2001
CSD655E
CSD1489B
KTC3198

KTA1266

2SA1235
2SC3052
DTA144TK
DTC114TK
RT1N144C

2SK2158

IC BLOCK DIAGRAM

IC, BA5936

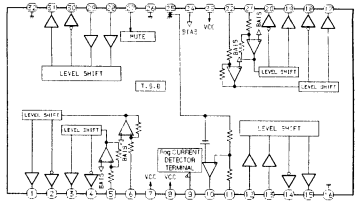

IC, M62495FP

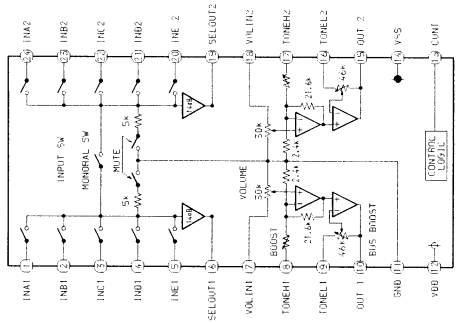

IC, BA3880FS

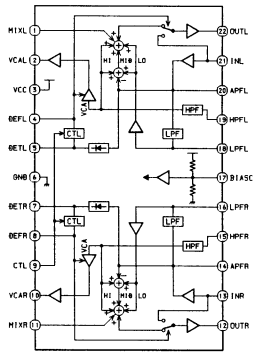

IC, MM1454XFBE

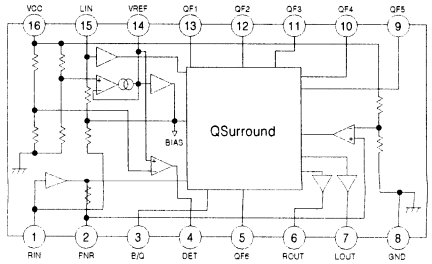

CD C.B (COMPONENT SIDE)

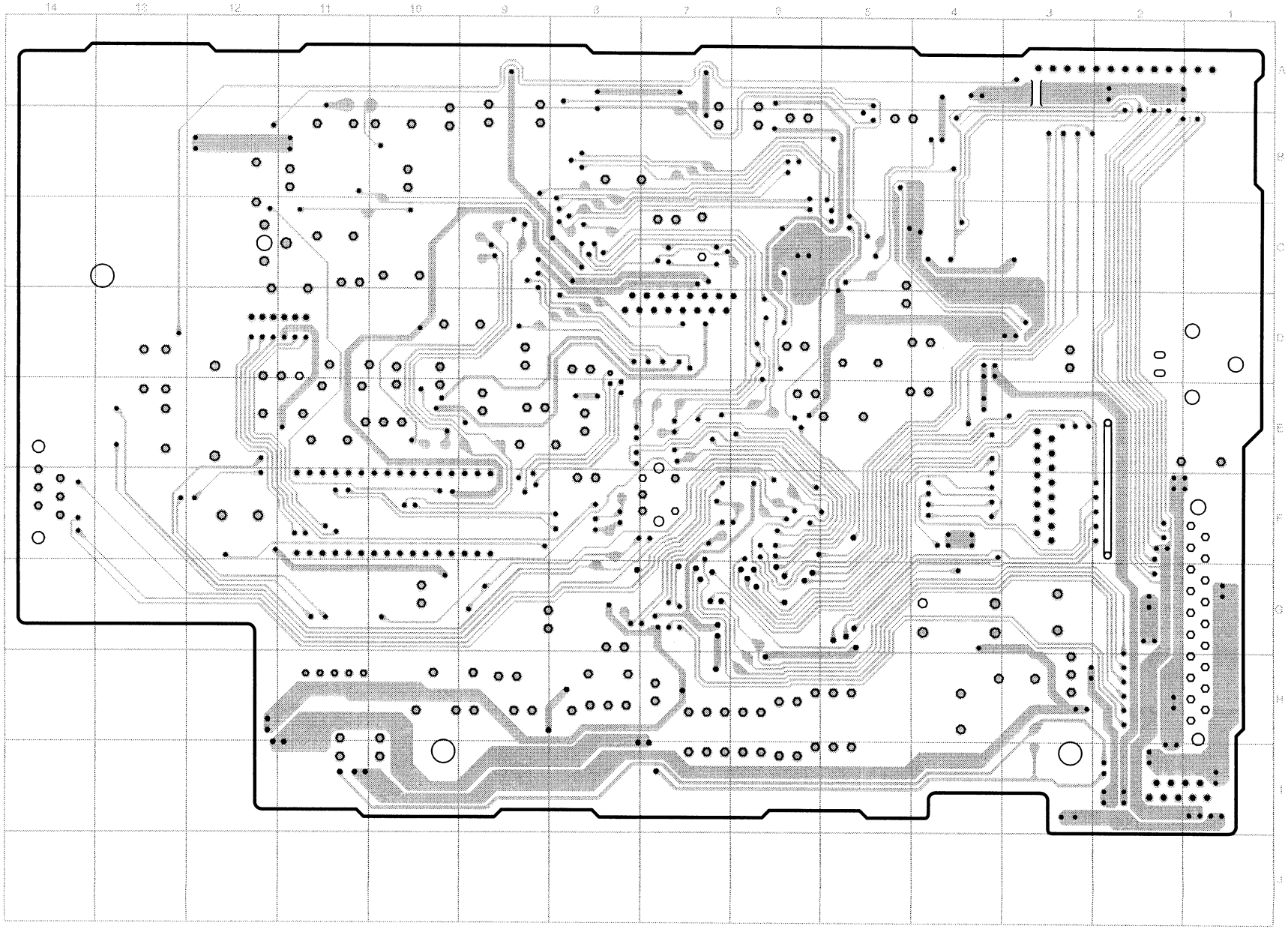

CD C.B (CONDUCTOR SIDE)

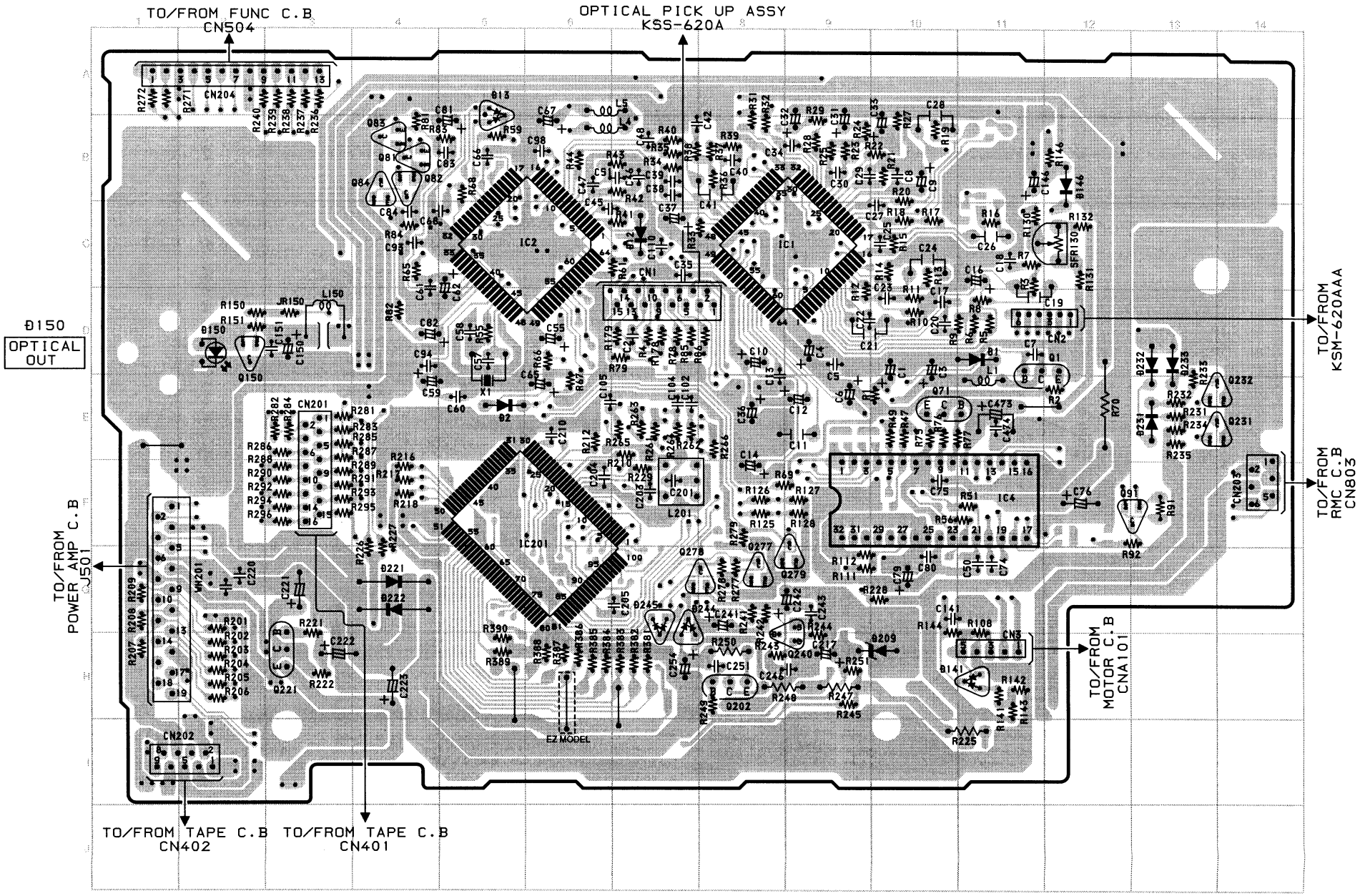

SCHEMATIC DIAGRAM-1 (CD 1/2)

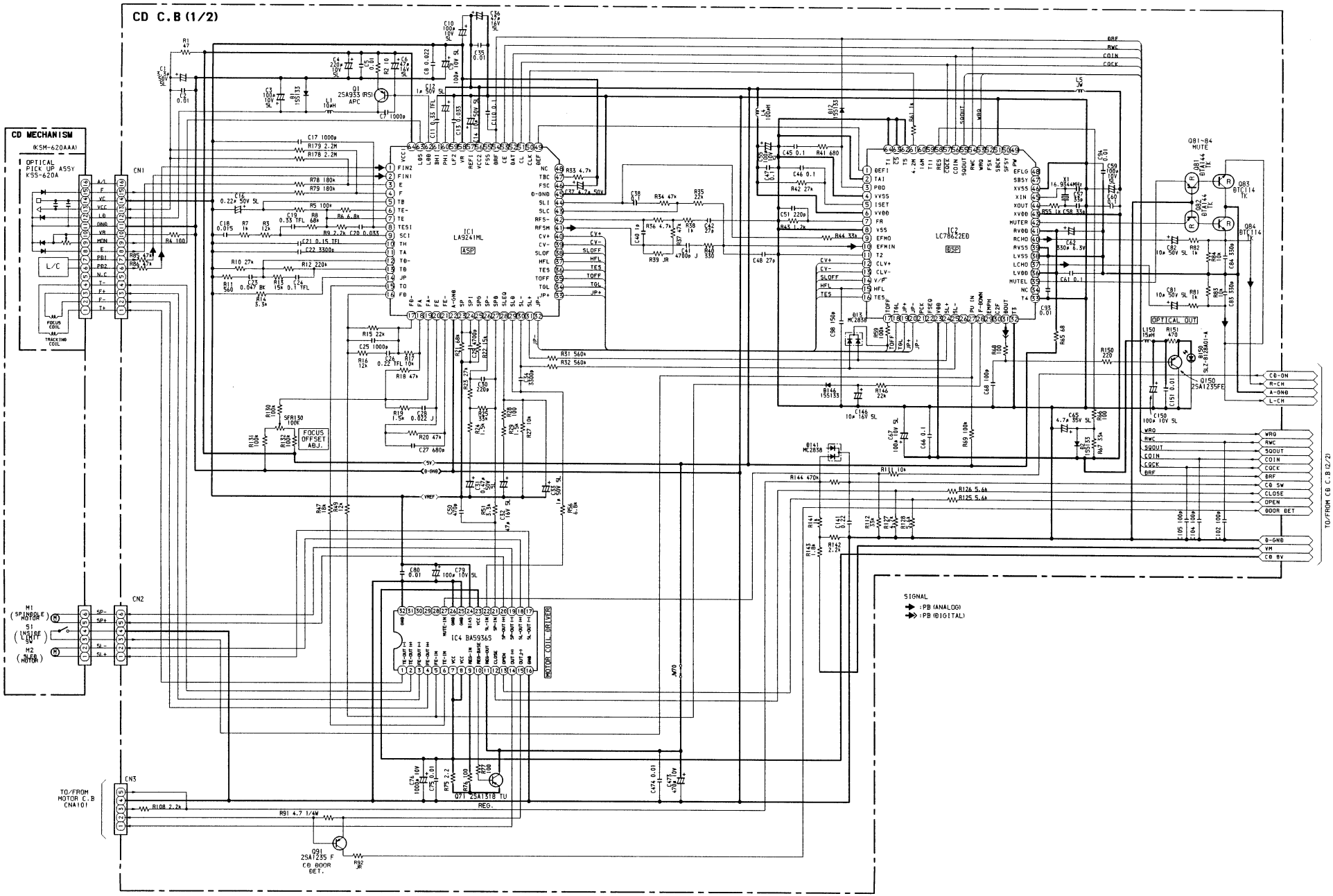

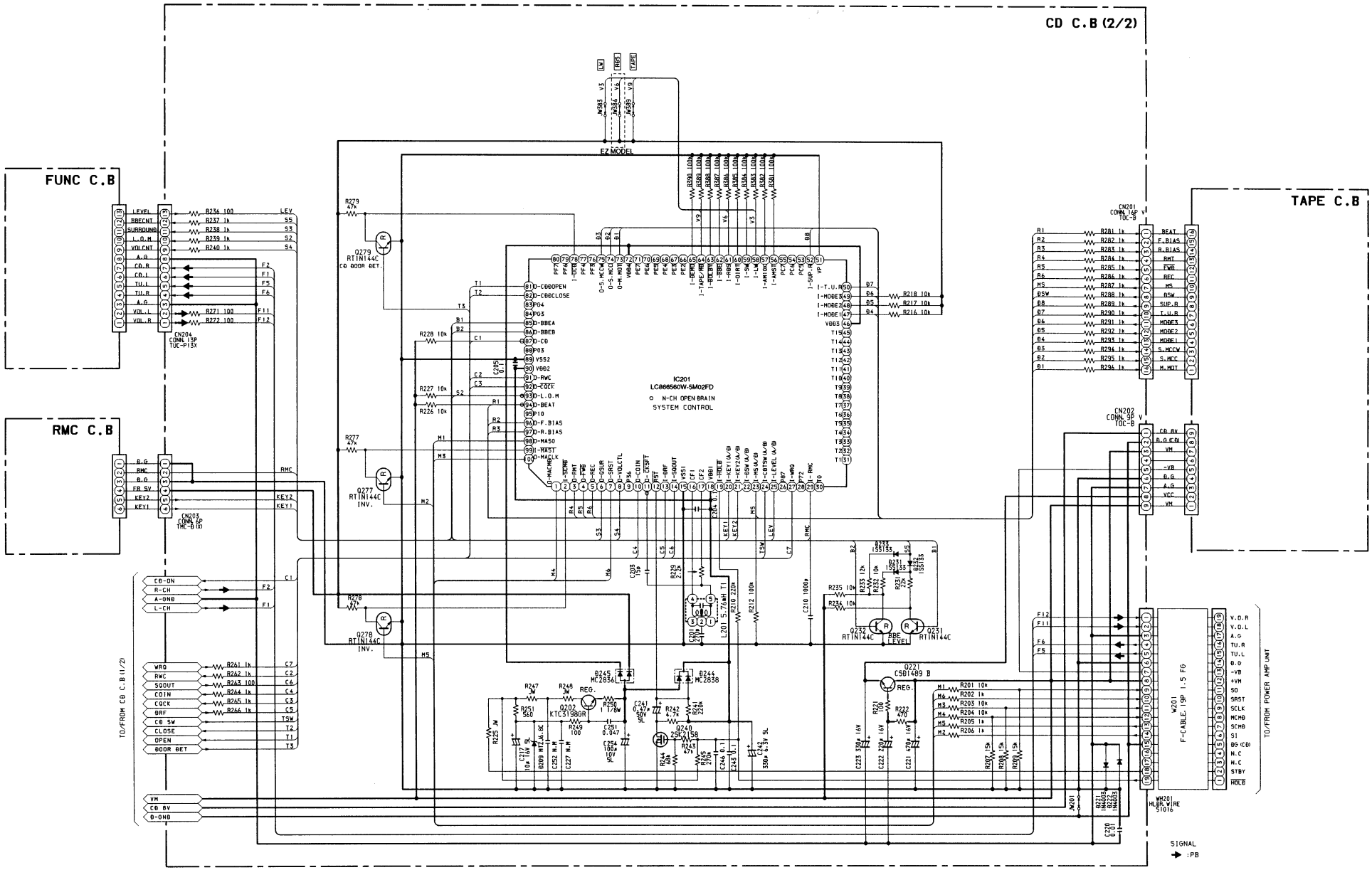
CD C.B (2/2)
FUNC C.B
RMC C.B
TAPE C.B
EZ MODEL
IC201
LC866560W-5M02FD
N-CH OPEN DRAIN
SYSTEM CONTROL
CN204
CONN. 13P
TOC-P13X
CN203
CONN. 6P
TMC-B (X)
CN201
CONN. 16P
TOC-B
CN202
CONN. 9P
TOC-B
Q279
RTN144C
CD DOOR DET.
Q277
RTN144C
INV.
Q278
RTN144C
INV.
Q232
RTN144C
BBE LEVEL
Q231
RTN144C
Q221
C5014B9 B
REG.
Q202
KTC3198GR
REG.
Q240
2SK2158
D245
MC2836
D244
MC2838
W201
F-CABLE 19P 1.5 FG
TO/FROM CD C.B (1/2)
TO/FROM POWER AMP UNIT
SIGNAL
:PB

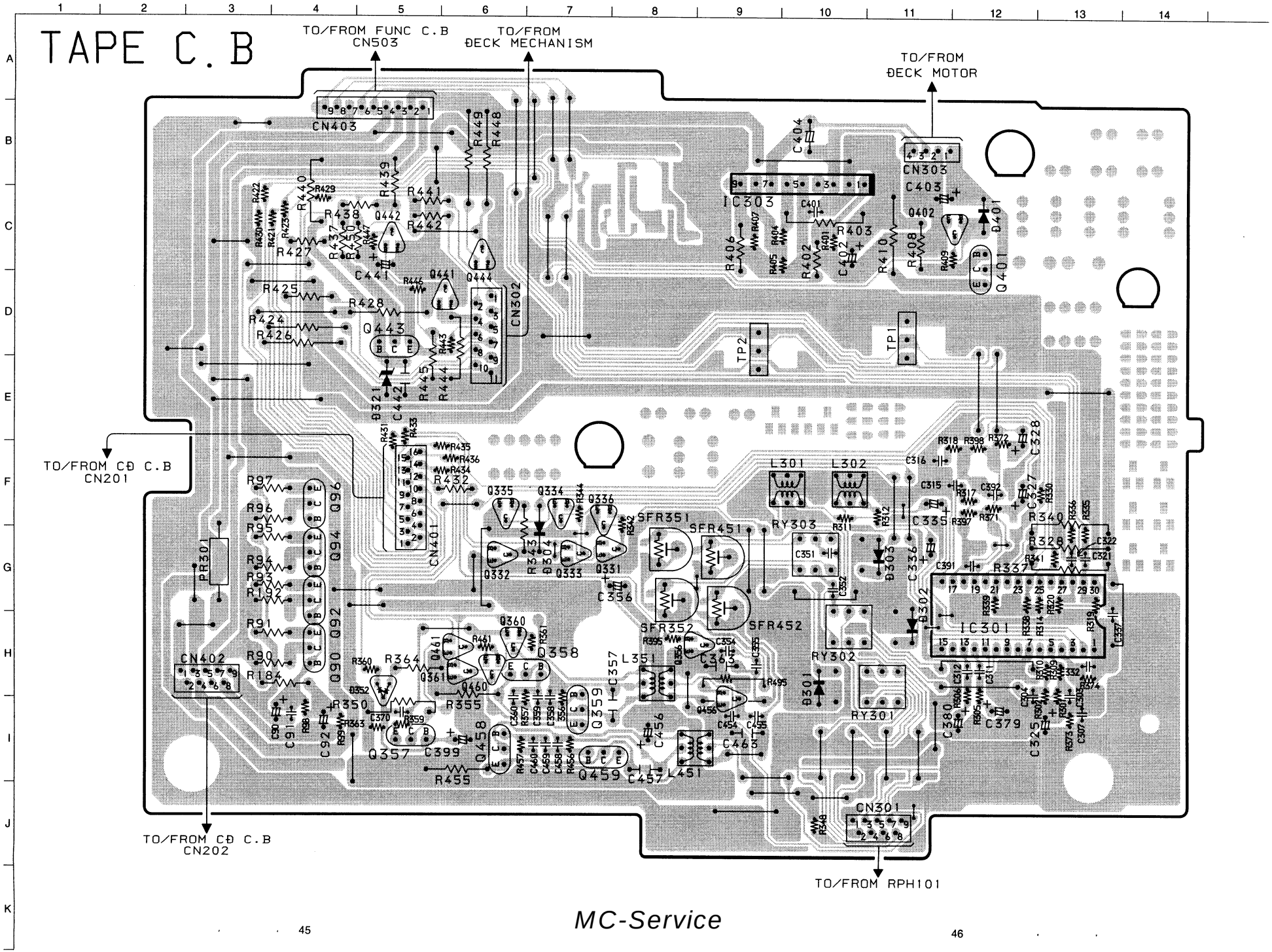
TAPE C.B
TO/FROM FUNC C.B
CN503
TO/FROM
ĐECK MECHANISM
TO/FROM
ĐECK MOTOR
TO/FROM CĐ C.B
CN201
TO/FROM CĐ C.B
CN202
TO/FROM RPH101
CN403
CN303
CN302
CN401
CN402
CN301
IC303
IC301
TP1
TP2
PR301
SFR351
SFR451
SFR352
SFR452
RY303
RY302
RY301
L301
L302
L351
L451

WIRING-3 (KEY)

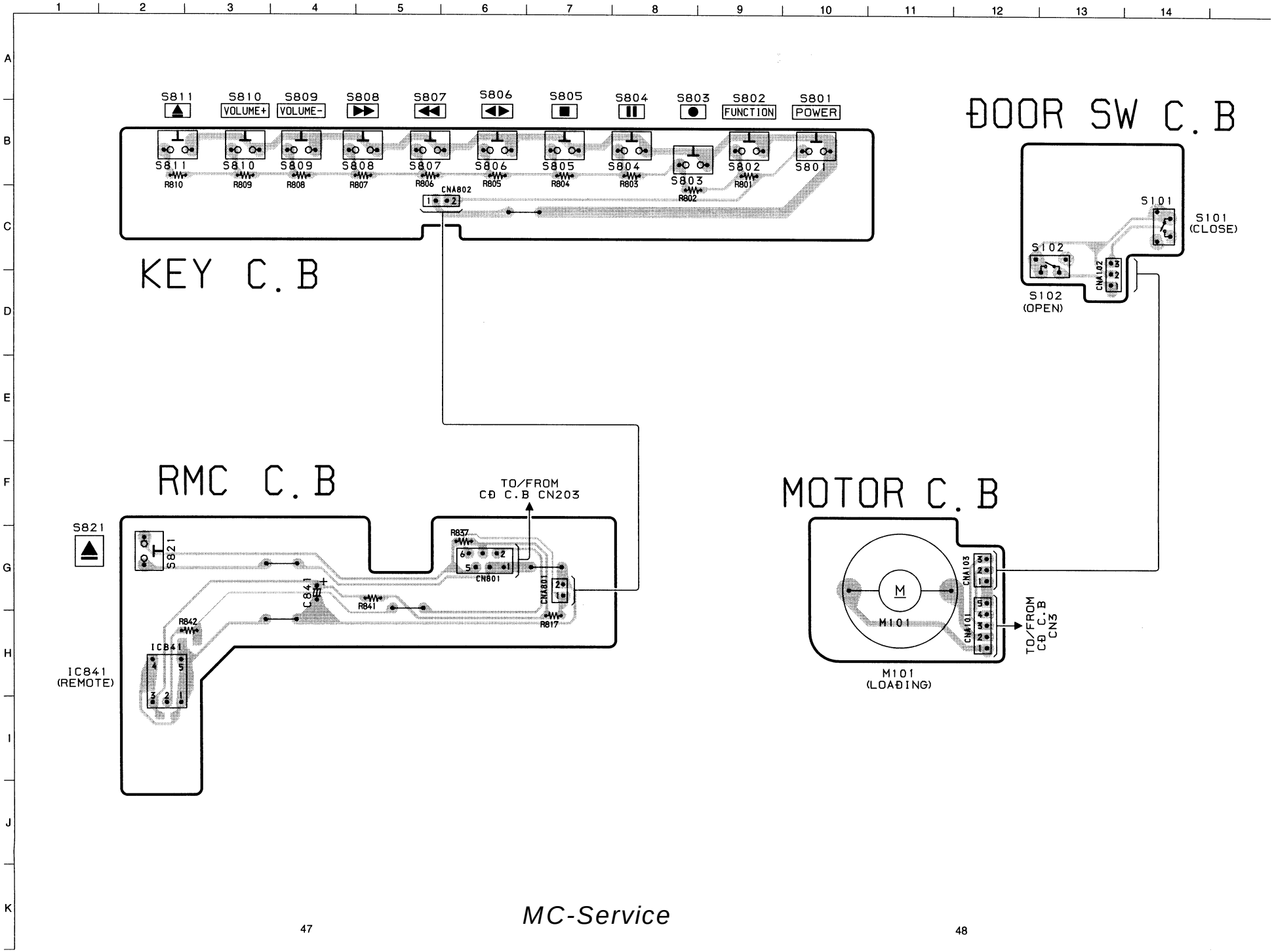
S811
S810
VOLUME+
S809
VOLUME-
S808
S807
S806
S805
S804
S803
S802
FUNCTION
S801
POWER
R810
R809
R808
R807
R806
R805
R804
R803
R802
R801
CNA802
KEY C.B
DOOR SW C.B
S101
S101
(CLOSE)
S102
S102
(OPEN)
CNA102
RMC C.B
TO/FROM
CD C.B CN203
S821
R837
CN801
CNA801
C841
R841
R842
R817
IC841
IC841
(REMOTE)
MOTOR C.B
CNA103
CNA101
M101
M101
(LOADING)
TO/FROM
CD C.B
CN3

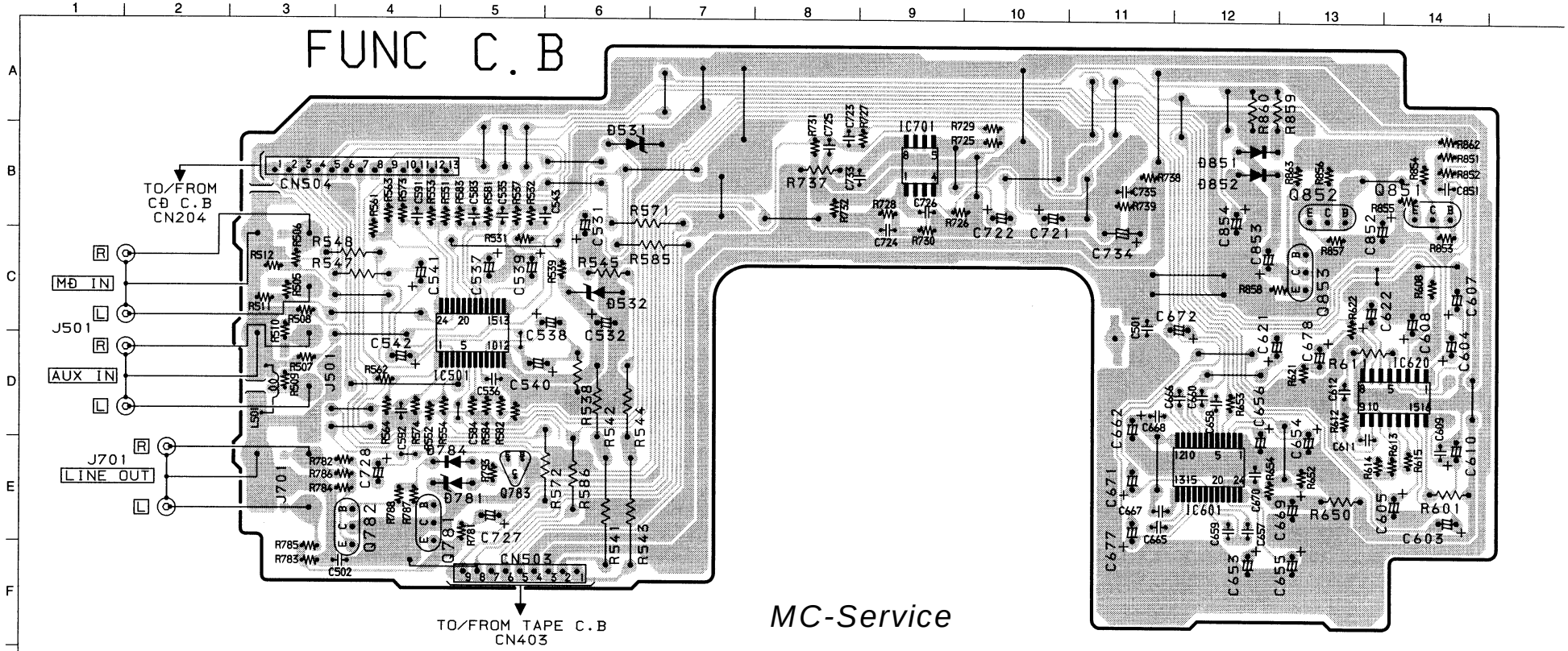

MC-Service

DECK C.B

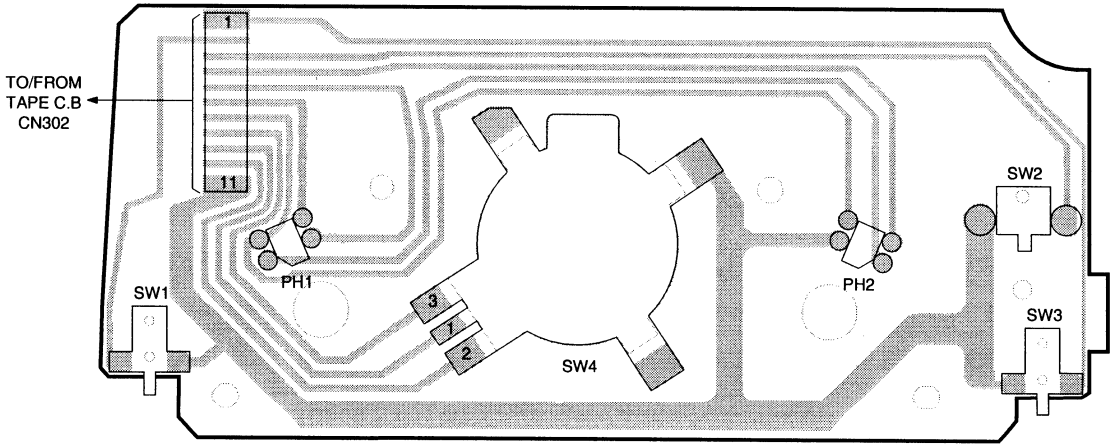

SCHEMATIC DIAGRAM-3 (TAPE/FUNC/KEY)

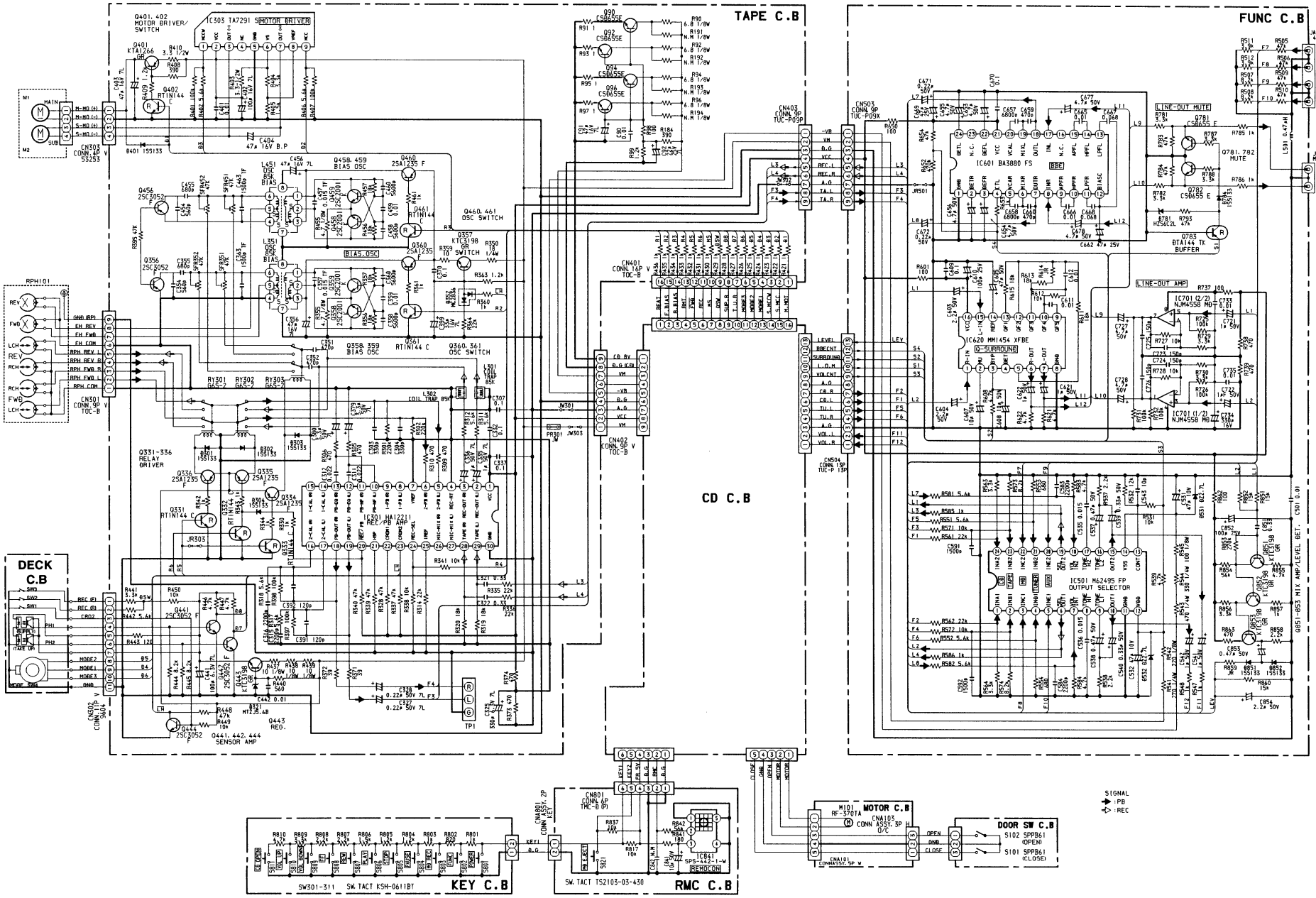

TEST MODE

1. CD Test Mode

1-1. How to Start Up the CD Test Mode

While pressing the "CD OPEN/CLOSE" button, connect the AC plug to the power outlet.
When the CD test mode is started up. When the CD test mode starts up, all displays turn on.

Note: When the PANEL, TOP has been removed for each CHAS, GEAR, be sure to short pin-4 and pin-5 of the connector CN3 on the CD board in order to recognize that the CD lid is closed.

1-2. Releasing the CD Test Mode

Remove the shorting between pin-4 and pin-5 of the connector CN3 on the CD board to return to the original setup.
Then press the POWER button or the FUNCTION button, or remove the AC plug from the power outlet to release the CD test mode.

1-3. Function Description of the Test Mode

MODE	Operation	Indication on display	Function	Contents
Start mode	Starting up the test mode	CD TEST		
Search mode	■	CD	Continuous focus searching. The pickup lens repeats the full-swing up-down motion * Note	Check APC circuit. Laser current measurement. Focus error waveform check.
Play mode	▶	Track No. and playing time are displayed	Normal playback. When the TOC reading is not possible, the same movement as in the search mode.	Focus servo. Tracking servo. CLV servo. Sled servo.
Traverse mode	❚❚	Track No. and playing time flash	Playback PAUSE mode	Tracking servo OFF.
Sled mode	▶▶ ◀◀	CD TEST	The pickup moves to the innermost track The pickup moves to the outermost track	Sled servo. Check operation of the mechanism.

Note: If the focus search operation is continued for 10 minutes or longer, heating of the driver IC is accumulated to trigger the protection circuit that will stop operation of the CD system. .Turn off the main power and re-start operation about 10 minutes later.

ELECTRICAL ADJUSTMENT

CD C.B

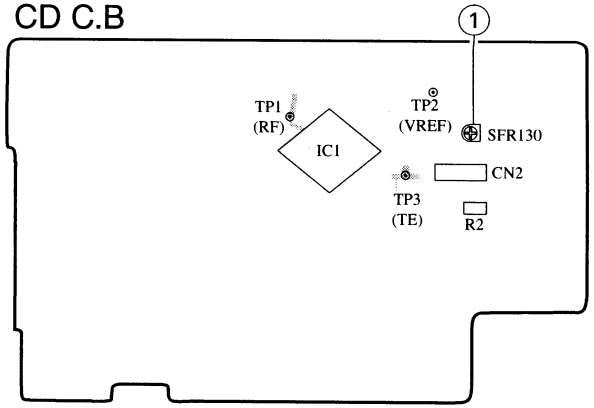

< CD SECTION >

Note:
- Connect a probe (10: 1) of the oscilloscope test point for adjustment.
- Connect ground (⊖) terminal of oscilloscope probe to TP3 (VREF) for all adjustment.

1. Focus Bias Adjustment
Make the focus bias adjustment when replacing and repairing the optical block.

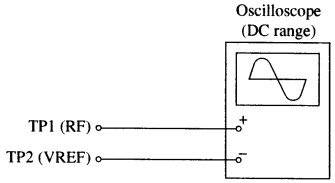

1) Connect an oscilloscope to test points TP1 (RF) and TP2 (VREF).
2) Turn on the power switch.
3) Insert test disc TCD-782 (YEDS-18) and play back the second program.
4) Adjust SFR103 so that RF signal of the test point TP1 (RF) is MAX and CLEARREST.

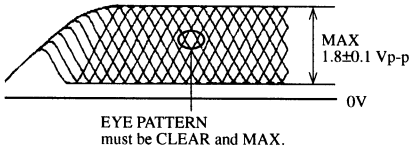

VOLT/DIV: 0.5V
TIME/DIV: 0.5μS

2. Tracking Balance Check

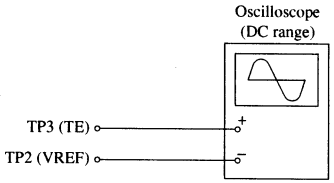

1) Connect an oscilloscope to test points TP3 (TE) and TP2 (VREF).
2) Start up the CD test mode.
3) Insert the test disc TCD-782 (YEDS-18) and enter the traverse mode of the CD test mode.
4) Confirm that the traverse waveform on an oscilloscope is vertically symmetrical as shown in the figure below.
5) After confirming the waveform, release the CD test mode.

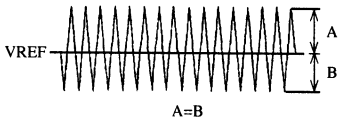

VOLT/DIV: 20mV
TIME/DIV: 1mS

3. Laser Current Check
The current of the laser signal can be checked with the voltages on both sides of R2 (voltage across 10).
The difference for the specified value shown on the label must be within ± 6.0mA.

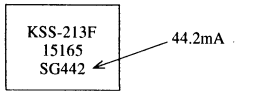

$$\text{Laser current Iop} = \frac{\text{Voltage across R2}}{10\Omega}$$

MC-Service

TAPE C.B

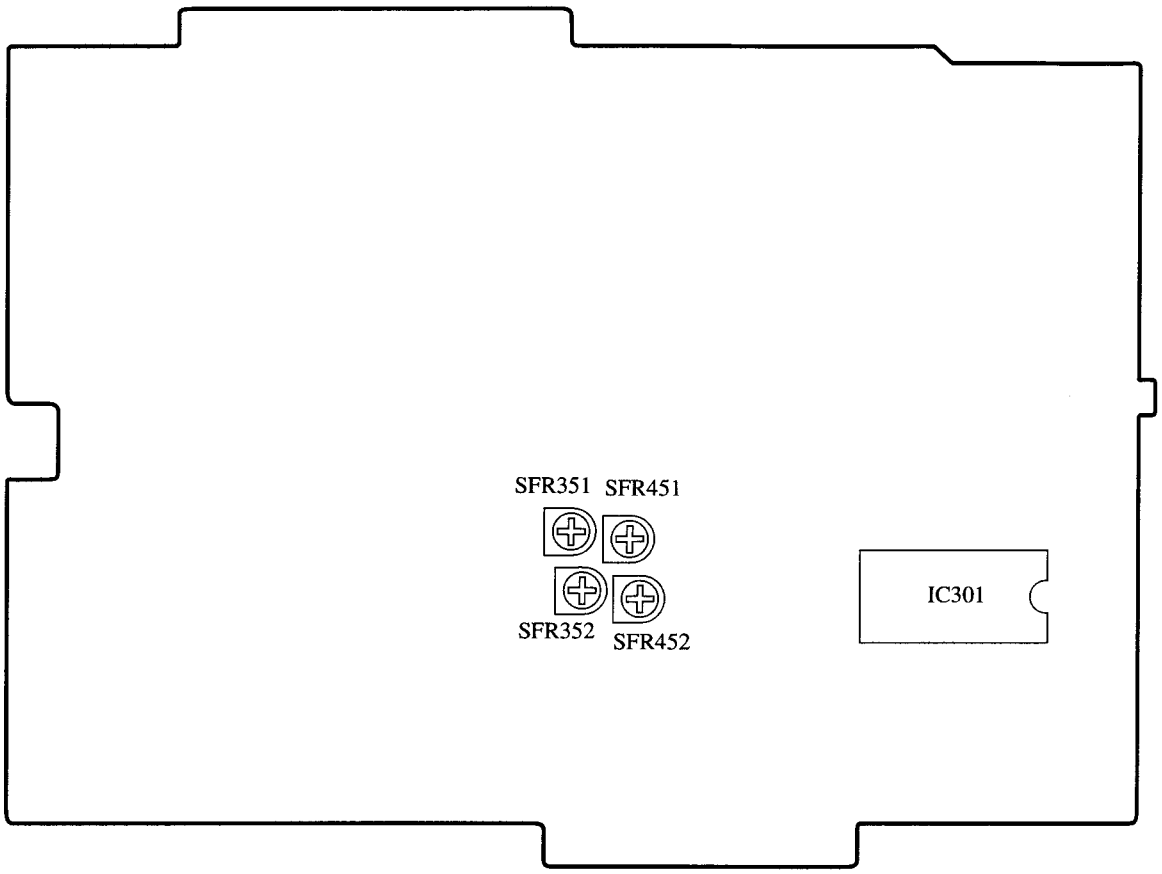

< DECK SECTION >

1. Record/Playback Frequency Response Characteristics Adjustment
   Adjustment conditions
   Settings:
   - Test tape: TTA-602
   - Test point: LINE OUT (J701)
   - Input signal: 1kHz/10kHz, AUX IN (J501)
   - Adjustment locations: FORWARD direction ..... SFR351(Lch), SFR352 (Rch)
   - Adjustment locations: REVERSE direction ..... SFR451 (Lch), SFR452 (Rch)

   * Adjustment can be performed from the bottom of the cabinet.

   Method:
   1) Input the 1kHz signal and adjust the input signal level for -20 dB.
   2) Set the XR-M88 into the record mode and record the 1kHz and 10kHz signals alternately.
   3) Play back the segment that is recorded in step 2) and adjust SFR351 and SFR352 so that both the 1kHz and 10kHz signals have the same level within 0 dB +3/-4dB.
   4) Perform the same adjustment by adjusting SFR451 and SFR452 in the REVERSE mode in the same way.

IC DESCRIPTION

IC, LC866560W-5M02FD

Pin No.	Pin Name	I/O	Description
1	O-MACMD	O	Command output to slave microprocessor.
2	I-$\overline{\text{SCMD}}$	I	Command input from slave microprocessor.
3	O-ARDY	O	Serial data send/receive preparation completion output for MD UNIT control. (TAPE REC MUTE output).
4	O-SREQ	O	Serial data transfer request for MD UNIT control. (FWD/RWD switching output during TAPE PLAY/REC).
5	I-MREQ	I	Serial data transfer request for MD UNIT control. (REC/PB switching output).
6	O-SURROUND	O	QSURROUND ON/OFF output.
7	O-SRST	O	Reset signal output to slave microprocessor.
8	O-VOLCTL	O	Connected to VOL/P.EQ IC M62439SP pin-⑪ CONT.
9	P36	O	NC.
10	O-COIN	O	Connected to CD DSP LC78622E pin-56 COIN and CD ASP LA9240M pin-52 DAT.
11	O-$\overline{\text{CKSFT}}$	O	Clock shift output. "L" at clock shift.
12	$\overline{\text{RST}}$	I	Microprocessor reset.
13	I-DRF	I	Connected to CD ASP LA9240M pin-54 DRF.
14	I-SQOUT	I	Connected to CD DSP LC78622E pin-55 SQOUT.
15	VSS1	—	GND.
16	CF1	I	5.76 MHz. Connected to oscillator.
17	CF2	O	
18	VDD1	—	Microprocessor power supply. (μ-com 5V).
19	I-$\overline{\text{HOLD}}$	I	Hold state detection. (A/D).
20, 21	I-KEY1, I-KEY2	I	KEY AD data input.
22	AN3	I	DECA MECA state detection input. (AD).
23	AN4	I	TAPE MUSIC SENSOR input. (A/D).
24	I-CDDSW	I	CD DOOR OPEN/CLOSE state detection input. (AD).
25	I-SPE	I	Spare level detection. (A/D).
26	P87	I	NC.
27	I-WRQ	I	Connected to CD DSP LC78622E pin-53 WRQ.
28	P72	I	NC.
29	I-RMC	I	Remote control signal input.
30-45	T0-T15	—	NC.
46	VDD3	—	Microprocessor power supply. (μ-com 5V).
47-49	MODE1-MODE3	I	DECK MECA state detection input.
50	T.U.R	I	Rotation detection of TAKE UP REEL of DECK MECA.
51	VP	—	Connected to negative polarity power supply -VFL for FL.
52	I-SUP.R	I	Rotation detection of TAKE UP REEL of DECK MECA.
53-55	PC5-PC7	I	NC.
56	I-AMST	I	INITIAL DIODE MATRIX input.
57	I-AM10K	I	
58	I-LW	I	
59	I-SW	I	

Pin No.	Pin Name	I/O	Description
60	I-OIRT	I	INITIAL DIODE MATRIX input.
61	I-RDS	I	
62	I-$\overline{\text{BBE}}$	I	
63	I-$\overline{\text{DOLBY}}$	I	
64	I-TAPE/$\overline{\text{MD}}$	I	
65	I-$\overline{\text{DEMO}}$	I	
66-71	PE2-PE7	I	NC.
72	VDD4	—	Microprocessor power supply. (μ-com 5V).
73	PF0	O	DECK MECA MAIN MOTOR control output.
74, 75	PF1, PF2	O	DECK MECA SUB control output.
76, 77	PF3, PF4	—	NC.
78	I-$\overline{\text{DOOR DET}}$	I	Over-current detection input to the CD DOOR MOTOR.
79, 80	PF6, PF7	—	NC.
81	O-CDDOPEN	O	CD DOOR OPEN control output.
82	O-CDDCLOSE	O	CD DOOR CLOSE control output.
83, 84	PG2, PG3	—	NC.
85	O-BBEA	O	BBE LEVEL switching output.
86	O-BBEB	O	
87	O-CD	O	Power supply control output of CD block.
88	O-$\overline{\text{MDRST}}$	O	MD UNIT 7ZG-9A reset signal output.
89	VSS2	—	GND.
90	VDD2	—	Microprocessor power supply. (μ-com 5V).
91	O-RWC	O	Connected to CD DSP LC78622E pin-59 RWC and CD ASP LA9240M pin-53 CF.
92	O-$\overline{\text{CQCK}}$	O	Connected to CD DSP LC78622E pin-57 $\overline{\text{CQCK}}$ and CD ASP LA9240M pin-51 CL.
93	O-L.O.M	O	LINE OUT MUTE output.
94	P07	—	NC.
95	O-SIN	O	Serial data output for MD UNIT control.
96	I-SOUT	I	Serial data input for MD UNIT control.(FWD REC BIAS control output).
97	I-ACLK	I	Serial clock input for MD UNIT control. (RWD REC BIAS control output).
98	O-MASO	O	Serial data output to slave microprocessor.
99	I-$\overline{\text{MASI}}$	I	Serial data input from slave microprocessor.
100	O-MACLK	O	Transfer clock output to slave microprocessor.

IC, LA9241ML

Pin No.	Pin Name	I/O	Description
1	FIN2	I	Pin to which external pickup photo diode is connected. RF signal is created by adding with the FIN1 pin signal. FE signal is created by subtracting from the FIN1 pin signal.
2	FIN1	I	Pin to which external pickup photo diode is connected.
3	E	I	Pin to which external pickup photo diode is connected. TE signal is created by subtracting from the F pin signal.
4	F	I	Pin to which external pickup photo diode is connected.
5	TB	I	DC component of the TE signal is input.
6	TE–	I	Pin to which external resistor setting the TE signal gain is connected between the TE pin.
7	TE	O	TE signal output pin.
8	TESI	I	TES "Track Error Sense" comparator input pin. TE signal is passed through a band-pass filter then input.
9	SCI	I	Shock detection signal input pin.
10	TH	I	Tracking gain time constant setting pin.
11	TA	O	TA amplifier output pin.
12	TD–	I	Pin to which external tracking phase compensation constants are connected between the TD and VR pins.
13	TD	I	Tracking phase compensation setting pin.
14	JP	I	Tracking jump signal (kick pulse) amplitude setting pin.
15	TO	O	Tracking control signal output pin.
16	FD	O	Focusing control signal output pin.
17	FD–	I	Pin to which external focusing phase compensation constants are connected between the FD and FA pins.
18	FA	I	Pin to which external focusing phase compensation constants are connected between the FD– and FA– pins.
19	FA–	I	Pin to which external focusing phase compensation constants are connected between the FA and FE pins.
20	FE	O	FE signal output pin.
21	FE–	I	Pin to which external FE signal gain setting resistor is connected between the FE pin.
22	AGND	—	Analog signal GND.
23	NC	—	No connection.
24	SP	O	Single ended output of the CV+ and CV– pin input signal.
25	SPG	I	Pin to which external spindle gain setting resistor in 12 cm mode is connected.
26	SP–	I	Pin to which external spindle phase compensation constants are connected together with SPD pin.
27	SPD	O	Spindle control signal output pin.
28	SLEQ	I	Pin to which external sled phase compensation constants are connected.
29	SLD	O	Sled control signal output pin.
30, 31	SL–, SL+	I	Sled advance signal input pin from microprocessor.
32, 33	JP–, JP+	I	Tracking jump signal input pin from DSP.
34	TGL	I	Tracking gain control signal input from DSP. Low gain when TGL = H.
35	TOFF	I	Tracking off control signal input pin from DSP. Off when TOFF = H.

Pin No.	Pin Name	I/O	Description
36	TES	O	Pin from which TES signal is output to DSP.
37	HFL	O	"High Frequency Level" is used to judge whether the main beam position is on top of bit or on top of mirror.
38	SLOF	I	Sled servo off control input pin.
39, 40	CV–, CV+	I	CLV error signal input pin from DSP.
41	RFSM	O	RF output pin.
42	RFS–	I	RF gain setting and EFM signal 3T compensation constant setting pin together with RFSM pin.
43	SLC	O	"Slice Level Control" is the output pin which controls the RF signal data slice level by DSP.
44	SLI	I	Input pin which control the data slice level by the DSP.
45	DGND	—	Digital system GND.
46	FSC	O	Output pin to which external focus search smoothing capacitor is connected.
47	TBC	I	"Tracking Balance Control" EF balance variable range setting pin.
48	NC	—	No connection.
49	DEF	O	Disc defect detector output pin.
50	CLK	I	Reference clock input pin. 4.23 MHz of the DSP is input.
51	CL	I	Microprocessor command clock input pin.
52	DAT	I	Microprocessor command data input pin.
53	CE	I	Microprocessor command chip enable input pin.
54	DRF	O	"Detect RF" RF level detector output.
55	FSS	I	"Focus Search Select" focus search mode (± search/+ search) select pin.
56	VCC2	—	Servo system and digital system Vcc pin.
57	REFI	—	Pin to which external bypass capacitor for reference voltage is connected.
58	VR	O	Reference voltage output pin.
59	LF2	I	Disc defect detector time constant setting pin.
60	PH1	I	Pin to which external capacitor for RF signal peak holding is connected.
61	BH1	I	Pin to which external capacitor for RF signal bottom holding is connected.
62	LDD	O	APC circuit output pin.
63	LDS	I	APC circuit input pin.
64	VCC1	—	RF system Vcc pin.

IC, LC78622ED

Pin No.	Pin Name	I/O	Description	
1	DEFI	I	Defect sense signal (DEF) input pin. (Connect to 0V when not used).	
2	TAI	I	For PLL.	Test signal input pin with built-in pull-down resistor. Be sure to connect to 0V.
3	PDO	O		Phase comparator output pin to control external VCO.
4	VVSS	—		GND pin for built-in VCO. Be sure to connect to 0V.
5	ISET	I		Pin to which external resistor adjusting the PD0 output current.
6	VVDD	—		Power supply pin for built-in VCO.
7	FR	I		Pin for VCO frequency range adjustment.
8	VSS	—	Digital system GND. Be sure to connect to 0V.	
9	EFMO	O	For slice level control.	EFM signal output pin.
10	EFMIN	I		EFM signal input pin.
11	TEST2	I	Test signal input pin with built-in pull-down resistor. Be sure to connect to 0V.	
12, 13	CLV+, CLV–	O	Disc motor control output. Three level output is possible using command.	
14	V/$\overline{P}$	O	Rough servo or phase control automatic selection monitoring output pin. Rough servo at H. Phase servo at L.	
15	HFL	I	Track detect signal input pin. Schmidt input.	
16	TES	I	Tracking error signal input pin. Schmidt input.	
17	TOFF	O	Tracking OFF output pin.	
18	TGL	O	Tracking gain selection output pin. Gain boost at L.	
19, 20	JP+, JP–	O	Track jump control signal output pin. Three level output is possible using command.	
21	PCK	O	EFM data playback clock monitoring pin 4.3218 MHz when phase is locked in.	
22	FSEQ	O	Sync signal detection output pin. H when the sync signal which is detected from EFM signal and thesync signal which is internally generated agree.	
23	VDD	—	Digital system power supply pin.	
24-28	SL+ - PUIN	I/O	General purpose input/output pin 1 to 5.	The pin is controlled by the serial data command from microprocessor. When the pin is not used, set the pin to the input terminal and connect to 0V, or alternately set the pin to output terminal and leave the pin open.
29	EMPH	O	De-emphasis monitor output pin. De-emphasis disc is being played back at H.	
30	C2F	O	C2 flag output pin.	
31	DOUT	O	DIGITAL OUT output pin. (EIAJ format).	
32, 33	TEST3, TEST4	I	Test signal input pin with built-in pull-down resistor. Be sure to connect to 0V.	
34	N.C.	—	Not used. Set the pin to open.	
35	MUTEL	O	L-channel 1-bit DAC.	L-channel mute output pin.
36	LVDD	—		L-channel power supply pin.
37	LCHO	O		L-channel output pin.
38	LVSS	—		L-channel GND. Be sure to connect to 0V.
39	RVSS	—	R-channel 1-bit DAC.	R-channel GND. Be sure to connect to 0V.
40	RCHO	O		R-channel output pin.
41	RVDD	—		R-channel power supply pin.
42	MUTER	O		R-channel mute output pin.

Pin No.	Pin Name	I/O	Description
43	XVDD	—	Crystal oscillator power supply pin.
44	XOUT	O	Pin to which external 16.9344 MHz crystal oscillator is connected.
45	XIN	I	
46	XVSS	—	Crystal oscillator GND pin. Be sure to connect to 0V.
47	SBSY	O	Subcode block sync signal output pin.
48	EFLG	O	C1, C2, single and dual correction monitoring pin.
49	PW	O	Subcode P, Q, R, S, T, U and W output pin.
50	SFSY	O	Subcode frame sync signal output pin. Falls down when subcode enters standby.
51	SBCK	I	Subcode read clock input pin. Schmidt input. (Be sure to connected to 0V when not in use.)
52	FSX	O	Pin outputting the 7.35 kHz sync signal which is generated by dividing frequency of crystal oscillator.
53	WRQ	O	Subcode Q output standby output pin.
54	RWC	I	Read/write control input pin. Schmidt input.
55	SQOUT	O	Subcode Q output pin.
56	COIN	I	Command input pin from microprocessor.
57	$\overline{CQCK}$	I	Command input read clock or subcode read input clock from SQOUT pin
58	$\overline{RES}$	I	LC78622 reset input pin. Set this pin to L once when the main power is turned on.
59	TST11	O	Test signal output pin. Use this pin as open (normally L output).
60	16M	O	16.9344 MHz output pin.
61	4.2M	O	4.2336 MHz output pin.
62	TEST5	I	Test signal input pin with built-in pull-down resistor. Be sure to connect to 0V.
63	$\overline{CS}$	I	Chip select signal input pin with built-in pull-down resistor. Be sure to connect to 0V while it is not controlling.
64	TEST1	I	Test signal input pin without built-in pull-down resistor. Be sure to connect to 0V.

Note: The same potential must be applied to the respective power supply terminals. (VDD, VVDD, LVDD, RVDD, XVDD)

IC BLOCK DIAGRAM

IC, BA5936

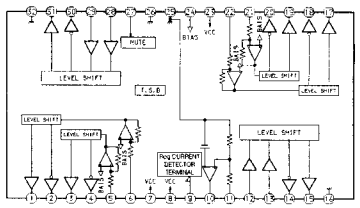

IC, M62495FP

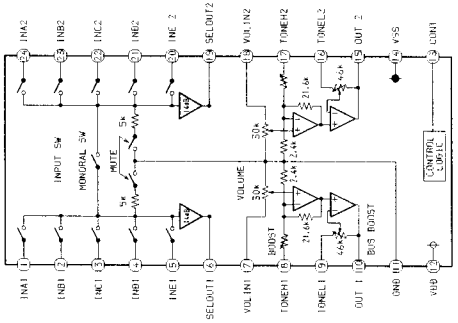

IC, BA3880FS

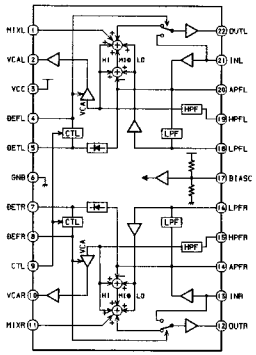

IC, MM1454XFBE

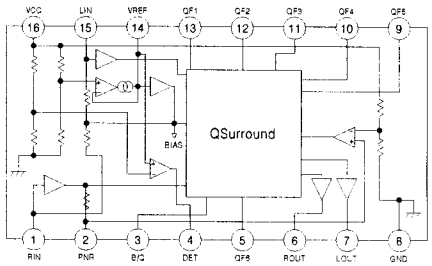

MECHANICAL EXPLODED VIEW 1/1

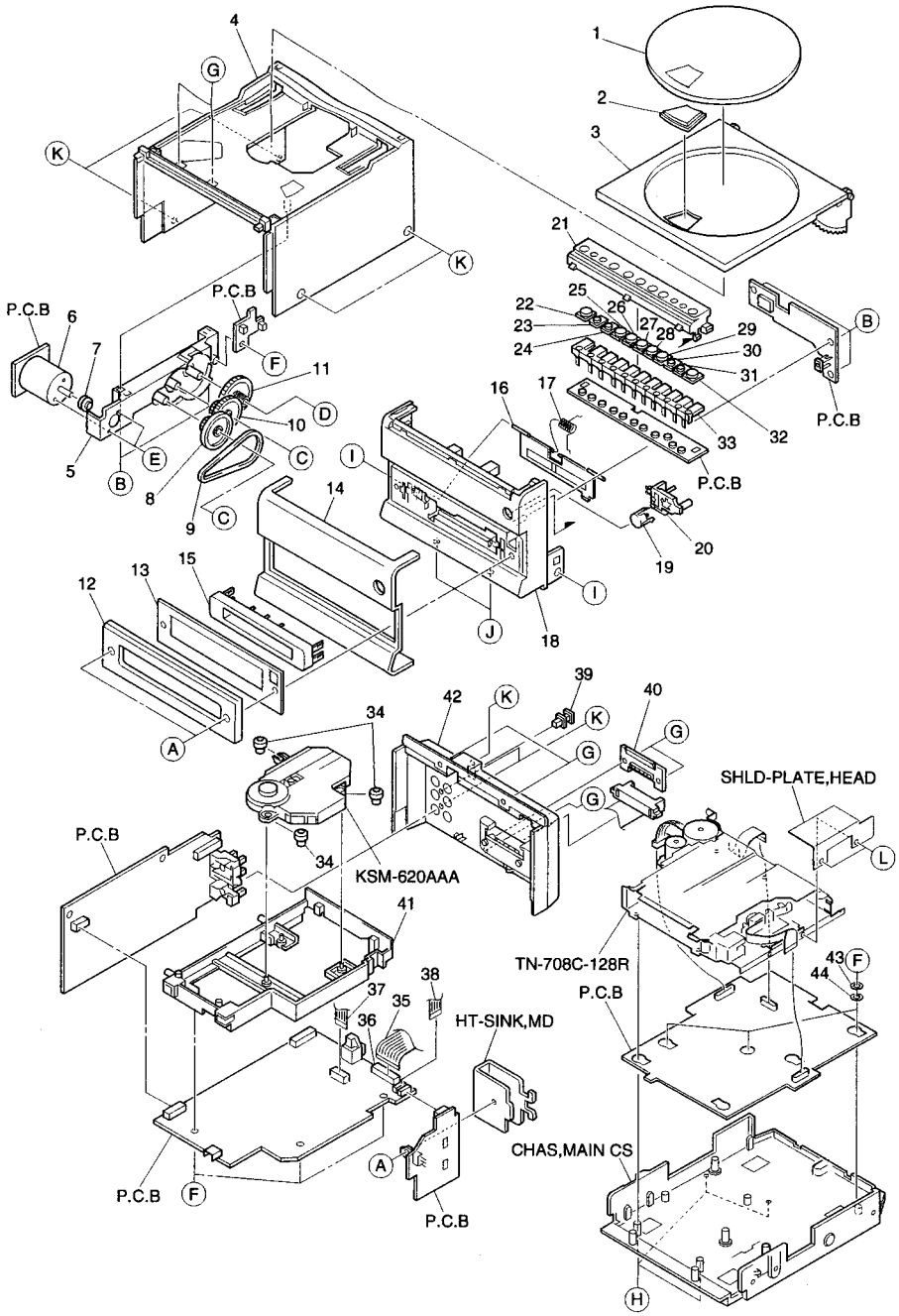

MECHANICAL PARTS LIST 1/1

DESCRIPTIONで判断できない物は "REFERENCE NAME LIST" を参照してください。
If can't understand for Description please kindly refer to "REFERENCE NAME LIST".

REF. NO	PART NO.	KANRI NO.	DESCRIPTION
1	8Z-CL1-014-010		PANEL,CD
2	8Z-CL1-012-010		WINDOW,CD
3	8Z-CL1-004-010		CABI,TOP FD
4	8Z-CL1-007-010		BOX,CD
5	8Z-CL1-205-010		HLDR,GEAR
6	87-A91-069-010		MOT,RF-370CA15370
7	8Z-CL1-210-010		PULLEY,MOTOR
8	8Z-CL1-211-010		PULLEY,CD
9	8Z-CL1-212-010		BELT,CD
10	8Z-CL1-209-010		GEAR,B
11	8Z-CL1-208-010		GEAR,A
12	8Z-CL1-011-010		WINDOW,MD
13	8Z-CL1-033-010		PLATE,WINDOW FD
14	8Z-CLB-012-010		PANEL,FD CS
15	8Z-CLB-002-010		PANEL,CS
16	8Z-CLB-004-010		PANEL,FLAP CS
17	8Z-CLB-005-010		SPR-T,FLAP
18	8Z-CLB-001-010		CABI,FR CS
19	8Z-CL1-028-010		CAP, EJECT
20	8Z-CL1-207-010		BTN,EJECT
21	8Z-CLB-014-010		PANEL,CONT CS
22	8Z-CL1-016-010		CAP, POWER
23	8Z-CL1-017-010		CAP, FUNC
24	8Z-CL1-018-010		CAP, REC
25	8Z-CL1-019-010		CAP, PAUSE
26	8Z-CL1-020-010		CAP, STOP
27	8Z-CLB-003-010		CAP, PLAY CS
28	8Z-CL1-022-010		CAP, REW
29	8Z-CL1-023-010		CAP, FF
30	8Z-CL1-024-010		CAP, DOWN
31	8Z-CL1-025-010		CAP, UP
32	8Z-CL1-026-010		CAP, OPEN
33	8Z-CL1-206-010		BTN,CONT
34	88-HV1-207-010		DMPR,MECHA
35	8Z-CL1-653-010		F-CABLE,19P 1.5 FG
36	87-A90-878-010		HLDR,WIRE 19P 1.5 51016
37	8Z-CLB-653-010		FF-CABLE, 16P 1.0 150MM
38	8Z-CLB-651-010		FF-CABLE, 9P 1.0 150MM
39	84-ZG1-245-210		CAP,OPTICAL
40	8Z-CL1-029-010		LID,CORD
41	8Z-CL1-202-010		CHAS,CD
42	8Z-CLB-074-010		PANEL,REAR FD CS EZ<89<EZ>>
42	8Z-CLB-072-010		PANEL,REAR FD CS K<88<K>>
43	8Z-CLB-203-010		W.3.2-120.7
44	8Z-CLB-006-010		RING PWB DECK
A	8Z-CL1-034-010		S-SCREW,ZCL1
B	87-067-703-010		BVT2+3-10 W/O SLOT
C	87-761-096-410		VFT2+3-10 GLD
D	87-B10-162-010		VFT2+2-6
E	87-261-092-410		V+3-4 GLD
F	87-067-579-010		TAPPING SCREW, BVT2+3-8
G	87-B10-269-010		UT2+3-12 W/O CR
H	87-261-101-410		V+3-18
I	87-721-095-410		QT2+3-8 W/O SLOT
J	87-067-761-010		BVT2+3-10 BLK
K	87-744-095-410		UT2+3-8CR
L	87-067-421-010		VTT+2-4

COLOR NAME TABLE

Basic color symbol	Color	Basic color symbol	Color	Basic color symbol	Color
B	Black	C	Cream	D	Orange
G	Green	H	Gray	L	Blue
LT	Transparent Blue	N	Gold	P	Pink
R	Red	S	Silver	ST	Titan Silver
T	Brown	V	Violet	W	White
WT	Transparent White	Y	Yellow	YT	Transparent Yellow
LM	Metallic Blue	LL	Light Blue	GT	Transparent Green
LD	Dark Blue	DT	Transparent Orange		

TAPE MECHANISM EXPLODED VIEW 1/1

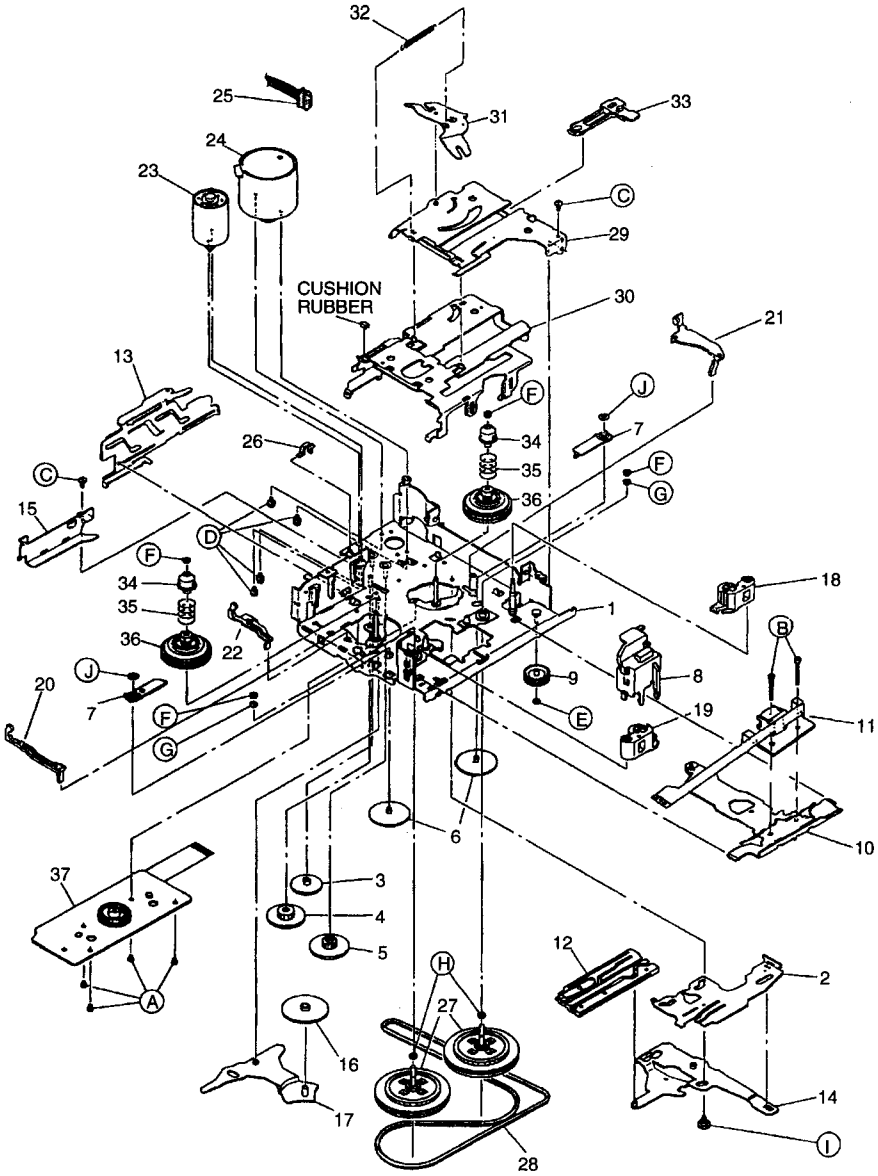

TAPE MECHANISM PARTS LIST 1/1

DESCRIPTIONで判断できない物は "REFERENCE NAME LIST" を参照してください。
If can't understand for Description please kindly refer to "REFERENCE NAME LIST".

REF. NO	PART NO.	KANRI NO.	DESCRIPTION
1	S1-970-015-070		CHASSIS RIVET ASY
2	S1-970-020-010		MAIN PLATE
3	S1-970-020-020		B GEAR
4	S1-970-020-030		C GEAR
5	S1-970-020-040		D GEAR
6	S1-970-020-120		P GEAR W
7	S1-970-020-060		P G PLATE
8	S1-970-020-070		GUIDE BKT
9	S1-950-100-020		MIDDLE PULLEY
10	S1-970-033-030		HEAD PANEL ASSY
11	S6-201-050-020		RPF AC-5544BM-5949
12	S1-970-043-010		O P PLATE ASSY
13	S1-970-045-040		EJECT LEVER RIVET ASSY
14	S1-970-045-020		S.B PLATE RIVET ASSY
15	S1-970-047-070		O.P PLATE HOLDER
16	S1-970-060-020		FR GEAR
17	S1-970-060-010		FR PLATE
18	S1-970-073-030		PINCH ROLLER ARM(F) ASSY
19	S1-970-073-040		PINCH ROLLER ARM(R)ASSY
20	S1-970-020-130		REC SENSOR F
21	S1-970-020-140		REC SENSOR R
22	S1-970-020-150		CR DETECTIVE PLATE HOLDER
23	S1-970-093-010		SUB MOTOR ASSY
24	S1-970-103-010		MAIN MOTOR ASSY
25	S1-970-100-020		M CONNECTOR ASSY
26	S1-950-140-030		WIRE CLUMPER
27	S1-970-113-010		FL CAPSTAN ASSY
28	S1-970-110-060		MAIN BELT(G)
29	S1-970-120-010		CASE LIFTER B
30	S1-970-120-160		CASSETTE CASE R
31	S1-970-120-040		P.S ACTUATOR PLATE
32	S1-970-120-050		P.S SPRING
33	S1-970-120-030		PACK SLIDER
34	S1-950-080-220		RELL CAP
35	S1-970-080-120		REEL WING SPRING
36	S1-970-083-020		REEL ASSY(K)
37	S1-970-133-070		REEL PWB ASSY
A	87-267-545-310		CAMERA TAPPING SCREW S 2.0-2.5
B	87-263-033-010		SCREW,2.0-4.0
C	87-351-547-410		S TAPING SCREW(FOR CAMERA)M2-3
D	87-B10-255-010		TAMS SCREW M2-3
E	86-544-439-010		P.WASHER(CUT)0.85-2.8-0.25
F	S9-W06-500-400		P.WASHER(CUT)1.55-3.5-0.5
G	87-081-978-010		P.WASHER 2.1-3.5-0.2
H	87-067-529-010		P.WASHER 2.1-3.5-0.35
I	S1-821-120-230		PK COLLAR SCREW A
J	S9-W06-400-700		HLW WASHER(CUT)2.1-4.0-0.35

CD MECHANISM EXPLODED VIEW 1/1

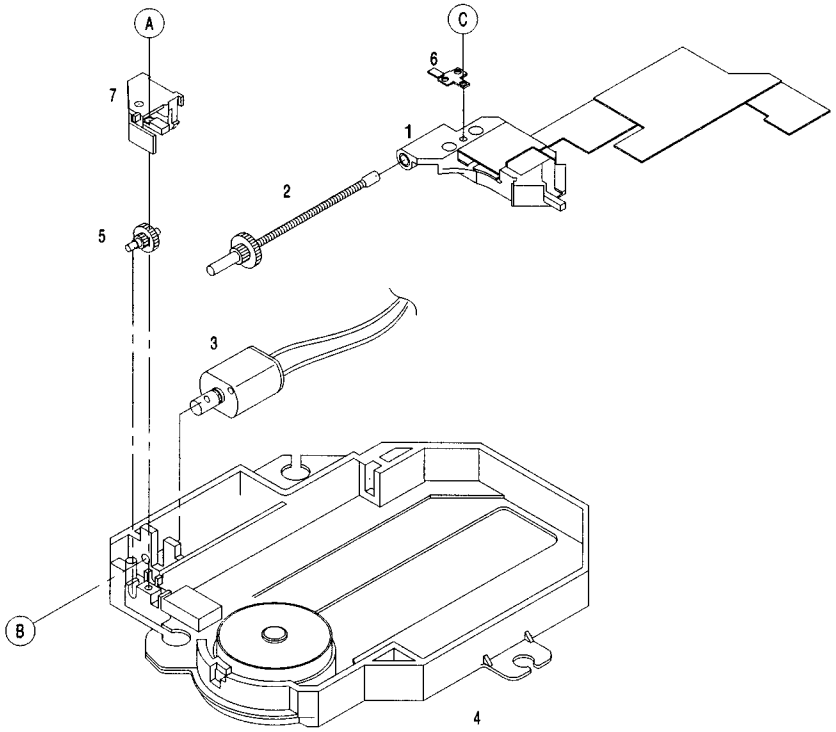

CD MECHANISM PARTS LIST 1/1

DESCRIPTIONで判断できない物は "REFERENCE NAME LIST" を参照してください。
If can't understand for Description please kindly refer to "REFERENCE NAME LIST".

REF. NO	PART NO.	KANRI NO.	DESCRIPTION
1	98-820-063-030		KSS-620A(RP)
2	9X-264-638-910		SLED SCREW ASSY
3	9A-491-219-9A0		SLED MOTOR ASSY
4	9X-264-648-210		MD ASSY
5	92-627-751-020		GEAR BN
6	92-646-914-010		LACK SPRING
7	92-646-913-010		HOLDER
A	92-646-352-010		TAPPING SCREW B2-8
B	92-627-668-010		SCREW M2-2.5
C	92-646-358-110		TAPPING SCREW B1.7-4

MODEL NO. SX-LM200

SPEAKER DISASSEMBLY INSTRUCTIONS

Type.1

Insert a flat-bladed screwdriver into the position indicated by the arrows and remove the panel. Remove the screws of each speaker unit andthen remove the speaker units.

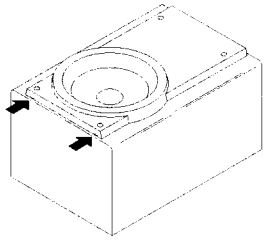

Type.2

Remove the grill frame and four pieces of rubber caps by pulling out with a flat-bladed screwdriver. Remove the screws from hold where installed rubber caps. Insert a flat-bladed screwdriver into the position indicated by the arrows and remove the panel. Remove the screws of each speaker unit and then remove the speaker units.

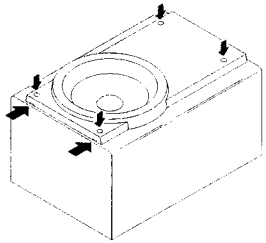

Type.3

Insert a flat-bladed screwdriver into the position indicated by the arrows and remove the panel. Turn the speaker unit to counter-clockwise direction while inserting a flat-bladed screwdriver into one of the hollows arround speaker unit, and then remove the speaker unit. After replacing the speaker unit, install it turnning to clockwise direction unitil "click" sound comes out.

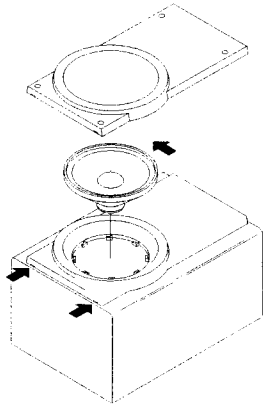

Type.4

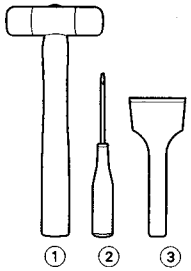

TOOLS

① Plastic head hammer
② (⊖) flat head screwdriver
③ Cut chisel

How to Remove the PANEL, FR

1. Insert the (⊖) flat head screwdriver tip into the gap between the PANEL, FR and the PANEL, SPKR. Tap the head of the (⊖) flat head screwdriver with the plastic hammer head, and create the clearance as shown in Fig-1.

2. Insert the cut chisel in the clearance, and tap the head of the cut chisel with plastic hammer as shown in Fig-2, to remove the PANEL, FR.

3. Place the speaker horizontally. Tap head of the cut chisel with plastic hammer as shown in Fig-3, and remove the PANEL, FR completely.

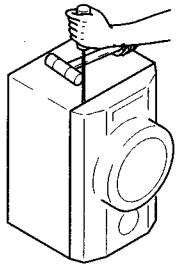

Fig-1

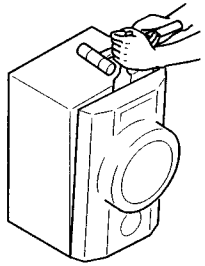

Fig-2

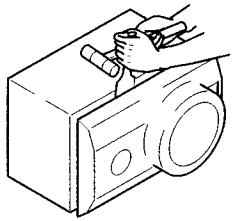

Fig-3

How to Attach the PANEL, FR

Attach the PANEL, FR to the PANEL, SPKR. Tap the four corners of the PANEL, FR with the plastic hammer to fit the PANEL, FR into the PANEL, SPKR completely.

SPEAKER PARTS LIST 1/1

DESCRIPTIONで判断できない物は "REFERENCE NAME LIST" を参照してください。
If can't understand for Description please kindly refer to "REFERENCE NAME LIST".

REF. NO	PART NO.	KANRI NO.	DESCRIPTION
1	8Z-CP1-012-010		CORD,SP
2	8Z-CP1-006-010		GRILLE,FRAME ASSY<YJTN>
2	8Z-CP1-017-010		GRILLE,FRAME ASSY B<YJBN>
3	8Z-CP1-003-010		PANEL,FR<YJTN>
3	8Z-CP1-015-010		PANEL,FR B<YJBN>
4	8Z-CP1-005-010		PANEL,TW<YJTN>
4	8Z-CP1-016-010		PANEL,TW B<YJBN>
5	8Z-CP1-601-010		SPKR, W 100
6	88-CL1-937-010		SPKR,TW 25

ACCESSORIES/PACKAGE LIST

DESCRIPTIONで判断できない物は "REFERENCE NAME LIST" を参照してください。
If can't understand for Description please kindly refer to "REFERENCE NAME LIST".

REF. NO	PART NO.	KANRI NO.	DESCRIPTION
1	8Z-CLB-915-010		IB,K(E)M<88<K>>
1	8Z-CLB-916-010		IB,EZ(9L)M<89<EZ>>
2	87-A90-118-010		ANT,WIRE FM (Z)
3	87-A90-030-010		ANT,LOOP AM-NC C
4	8Z-CLB-955-010		RC UNIT,ZCL-11